SAMSUNG

Product Catalogue

Commercial

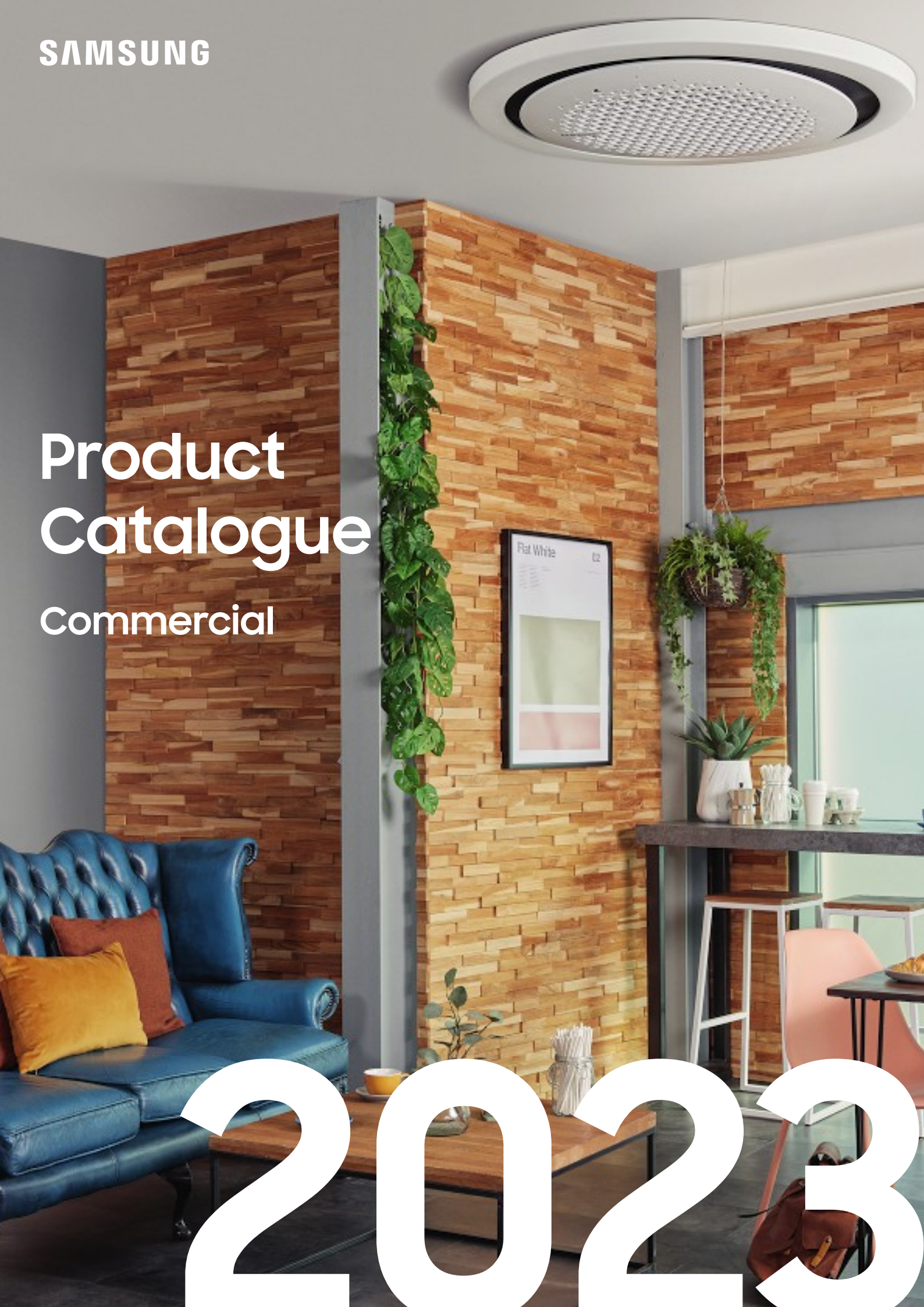

2023

Highlights for 2023

DVM S2

Samsung has been manufacturing DVM (Digital Variable Multi) outdoor units for 20 years. In 2021, Samsung introduced the next generation of VRF (Variable Refrigerant Flow) and the new DVM S2 range.

The current DVM S platform has been succeeded by the new DVM S2 range as the sixth generation of its Digital Variable Multi. The DVM S2 offers improved seasonal energy efficiency as compared to the current DVM S range. Artificial Intelligence (AI) control capabilities helps to optimize climate conditions based on diverse environment. This increases efficiency and performance without compromising on comfort. Additionally the DVM S2 offers enhanced installation and serviceability, all in a quieter unit made possible by outstanding noise reduction. In addition, the new range makes it easier to select units based on the streamlined indoor line up.

- Energy Efficiency – Redesigned to reduce the operating costs in the core components with unique technologies that are significantly more efficient.
- Active AI - Optimizes itself intelligently, based on machine learning about the installation conditions and usage patterns, so it always works efficiently and effectively.
- Refrigerant Reduction - Uses less refrigerant as it has a slimmer liquid line.
- Advanced Flash Injection - Features the AFI (Advanced Flash Injection) Compressor™, which delivers an incredible heating performance. Performs well, even at low temperatures, providing non-stop comfort in the coldest conditions.

Unique Indoor Range

In 2022, we added a new WindFree™ 4-Way Cassette for FCU to our signature WindFree™ range. Samsung's unique WindFree™ cooling disperses fresh air gently and evenly through thousands of micro-holes, creating "Still Air" conditions[1]. It allows people to live, work and relax comfortably without experiencing unpleasant cold drafts.

Another signature technology Samsung 360 Cassette offers a brand new way of staying comfortably cool in every corner of the room. Its innovative circular design not only means it perfectly fits in everywhere, but it also blows cool air in all directions, so that the whole room is the same temperature[2].

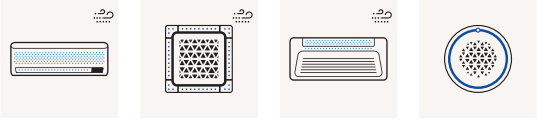

Wall Mounted | 4-Way Cassette FCU | 1-Way Cassette | 360 Cassette

[1] ASHRAE (American Society of Heating, Refrigeration, and Air-Conditioning Engineers) defines "Still Air" as air currents moving at speeds below 0.15 m/s, which lacks the presence of cold draughts.
[2] Within a 9.3 m radius the temperature difference is less than 0.6 °C. The test was carried out in the Samsung internal test lab.
* Now available in FCU

Premium Panels

Samsung has introduced Air Purification Panels, for the WindFree™ 1-Way and 4-Way Cassette and 360 Cassette. The washable filters provide easy maintenance and have been verified by Intertek for 99 % removal of certain types of bacteria with the use of the sterilization test[3].

Another highlight is the Auto Elevation Panel which simplifies filter maintenance for end users or service engineers and provides greater safety with the use of single click. Available for the WindFree™ 4-Way Cassette and 360 Cassette.

Air Purification Panel

- PM 1.0 Filter
- Indoor air quality indication
- Maintain comfort with WindFree™

Auto Elevation Panel

- Easy and safe maintenance of the filter therefore indoor air quality
- Dedicated remote controller
- Stylish design

b.IoT Lite

The integrated control solution optimized for Samsung's HVAC system provides operational convenience and energy savings.

- Suitable for small and medium sized buildings
- Differentiated control screen
- Operation history management
- Convenient control authority setting
- Management of connected devices (open protocol support for 3rd party devices)
- Energy saving for air conditioning (embedded algorithm)
- Energy use management

[3] Intertek Report No.:RT20E-S0010-R Date: APR. 17, 2020(Revised) Based on the data collected the Hypothesis is accepted: The K-element (Electrostatic Precipitator) of Samsung Electronics can sterilize the certain types of bacteria that collected on the filter. (Escherichia coli: above 99 %, Staphylococus aureus: above 99 %)

Product overview

VRF (DVM)

A Samsung VRF air conditioning system offers high installation flexibility with the new DVM S2 platform outdoor units, which can connect to up to 64 indoor units. This is an ideal solution for medium-sized to large commercial buildings, with the option of independently cooling or heating multiple rooms simultaneously.

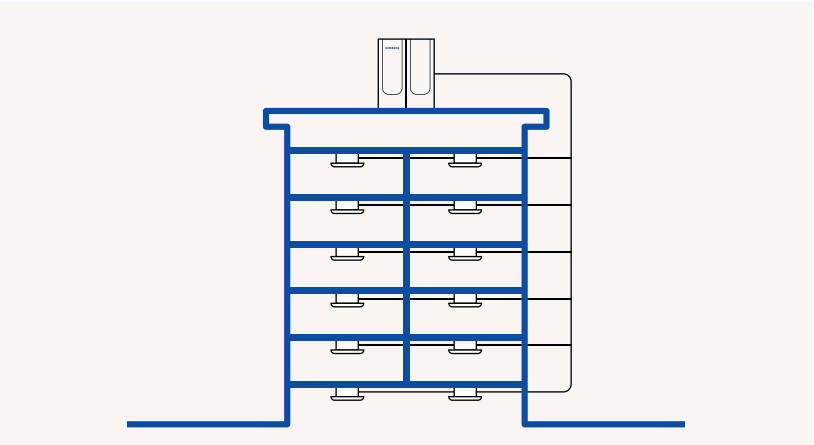

VRF Chiller (HVM)

A Samsung VRF Chiller air conditioning system follows a modular concept with the option of combining up to 16 HVM outdoor units to form one climate solution, which can be connected to a wide range of Fan Coil Units. The system utilises water for comfortable cooling and heating of any type of space.

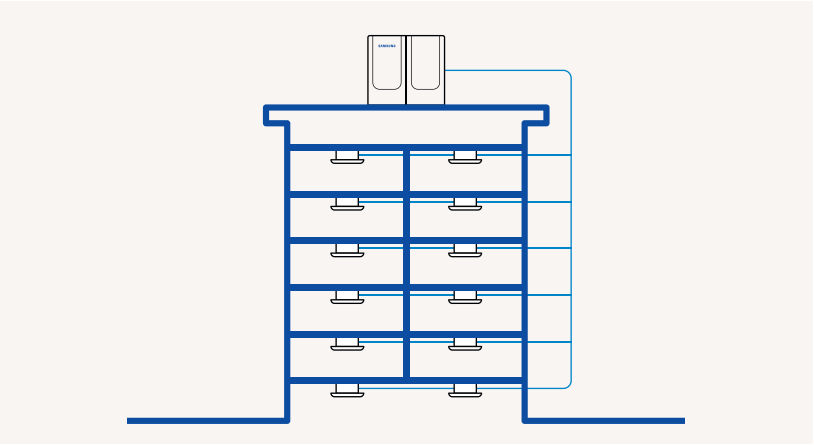

Ventilation (ERV)

A Samsung ERV system brings fresh outside air into a room to optimise indoor air quality, while automatically adjusting its operation mode in accordance with indoor and outdoor temperatures. It can be connected to a Samsung VRF system to form a total climate solution.

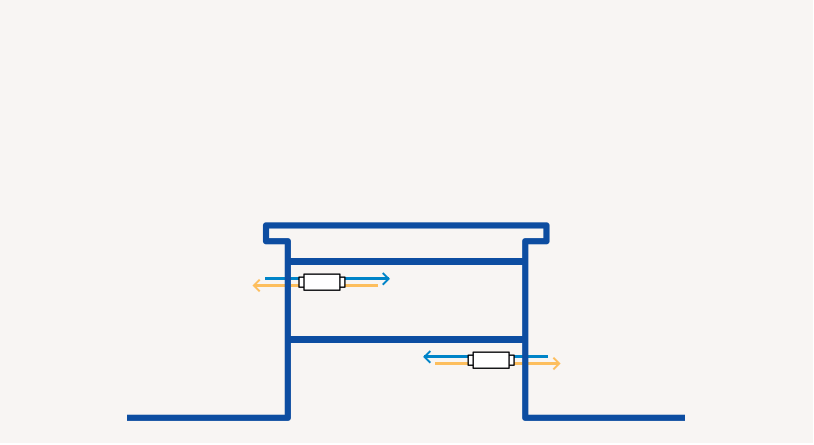

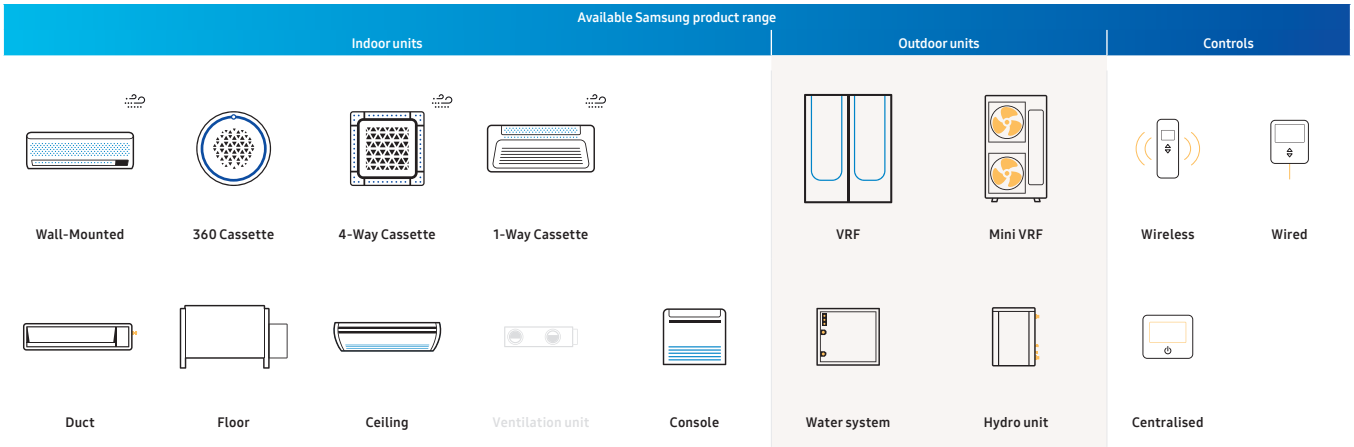

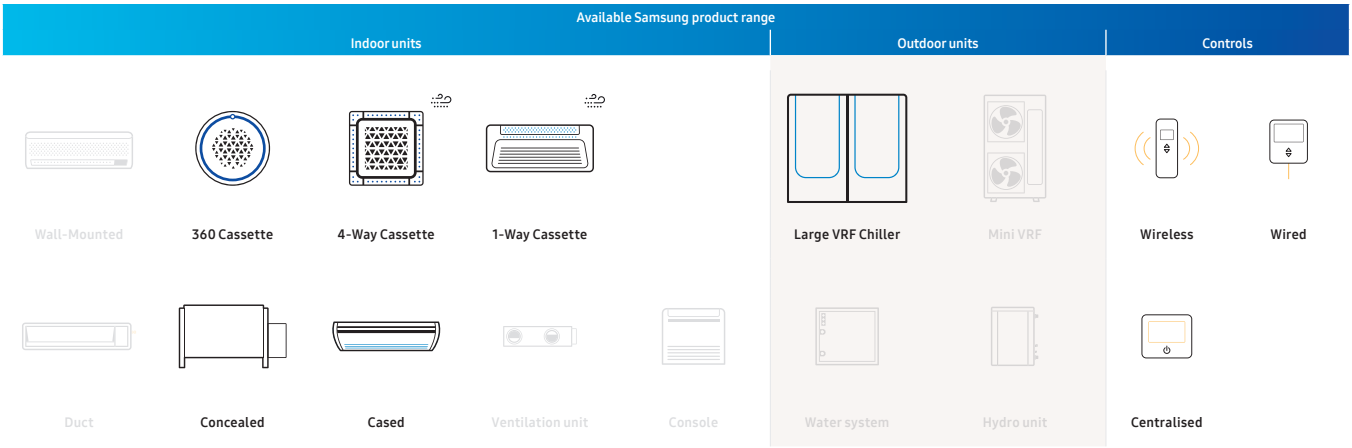

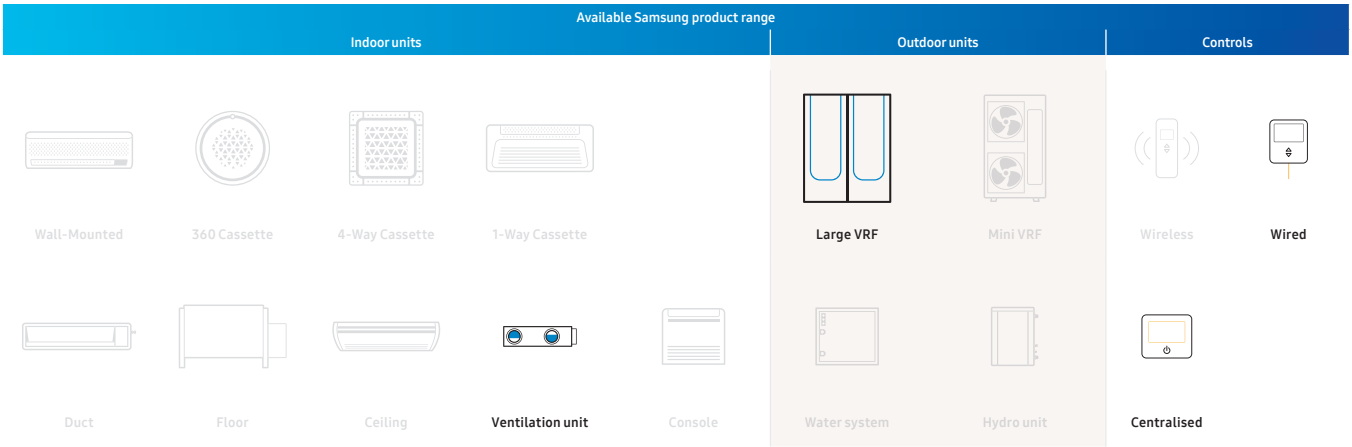

Schematic drawings are for illustrative purposes only. For accurate installation information please consult the technical data book. The selection of the exact product is subject to specific application conditions. FCU = Fan Coil Unit.
For more detailed product information and technical specifications, please consult the respective product pages of this Product Catalogue.

Table of contents

Introduction 8
Samsung Climate Solutions at a glance
Samsung reference projects in the spotlight
Regulations and standards
Certifications

Innovations in detail 18
DVM S2
DVM S Eco
DVM S Water
Heat Recovery for DVM
HVM Chiller
LSP Slim Duct
MSP/HSP Duct S
WindFree™ Deluxe UNIQUE
WindFree™ 4-Way Cassette UNIQUE
WindFree™ 1-Way Cassette UNIQUE
360 Cassette
ERV (Plus)
Air Handling Unit (AHU) Kit
b.IoT

VRF (DVM) 54
Line-up outdoor
Line-up indoor
Selection guide
Nomenclature
DVM S Eco Heat Pump NEW
DVM S2 Essential Heat Pump (2-Pipe)
DVM S2 Standard Heat Pump (2-Pipe)
DVM S2 High EER Heat Pump (2-Pipe)
DVM S Eco Heat Recovery NEW
DVM S2 High EER Heat Recovery (3-Pipe)
DVM S Water
WindFree™ 4-Way 600 x 600 Cassette UNIQUE
WindFree™ 4-Way Cassette UNIQUE
WindFree™ 1-Way Cassette UNIQUE
360 Cassette
LSP Duct
MSP Duct
HSP Duct
Console
Floor/Ceiling
Big Ceiling
Concealed Floor-Standing
Concealed Floor-Standing High Static Pressure
Packaged Floor-Standing
Boracay Wall-Mounted (EEV included and EEV excluded)
WindFree™ Deluxe (EEV included and EEV excluded) UNIQUE
Max Wall-Mounted
Hydro Unit
Mode Control Unit (MCU)
AHU Kit for Outdoor Unit

VRF Chiller (HVM) 200
Line-up outdoor
Line-up indoor
Selection guide
Nomenclature
HVM Chiller
WindFree™ 1-Way Cassette FCU UNIQUE
WindFree™ 4-Way Cassette FCU UNIQUE
360 Cassette FCU
Concealed FCU
Cased FCU

Ventilation (ERV) 228
ERV
ERV Plus for DVM S
OAP Duct for DVM S

Controls 240
Line-up
Selection guide
Features and dimensional drawings

Accessories 254
Line-up

Design and support 260
Samsung Climate Solutions Partner Portal
Samsung DVM Pro 2.0
Samsung HVM Selection Tool
Samsung specialist design support
Samsung Climate Solutions Academy

This document may either contain preliminary values or may lack some values that were not yet available at the time of creation. To obtain the latest information, please consult the Samsung Climate Solutions Partner Portal at **partnerhub.samsung.com/climate** or contact your Samsung representative.

Samsung Climate Solutions at a glance

Samsung Climate Solutions aims to help people find their flow, so they may feel and live their best life – be it at work, play or rest. We are committed to offering more energy-efficient solutions with innovative cooling, heating, domestic hot water, refrigeration and smart building solutions. For every space where people create memorable experiences together, be it commercial spaces or residential homes.

We offer:

- Cooling
- Heating
- Hot water
- Ventilation

Our market-centric product ranges

	Home	Hotel	Retail	Office	Education	Restaurant
Residential	RAC | FJM					
Light Commercial	CAC | FJM		CAC	CAC	CAC	CAC
Commercial		DVM | HVM | ERV	DVM | HVM | ERV	DVM | HVM | ERV	DVM | HVM | ERV	
Heating	EHS					
Controls	CONTROLS	CONTROLS	CONTROLS	CONTROLS	CONTROLS	CONTROLS

Services we provide to empower our partners

- Expert training
- Project design
- Technical support
- Marketing platforms
- Spare parts

Corporate and Technology milestones that make us proud

1974
Samsung introduces its first air conditioner.

2005
Samsung Electronics enters the European market for commercial air conditioning.

2017
Samsung Electronics opens Samsung Electronics Air Conditioner Europe B.V. (SEACE) in Amsterdam.

2014

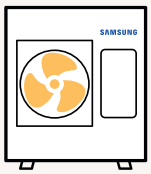

Arrival of the Samsung TDM concept, an all-in-one heat pump solution for heating, cooling and domestic hot water supply.

2015

Introduction of the Samsung 360 Cassette, the world's first circular air conditioner that fits seamlessly into the design of any space.

2017

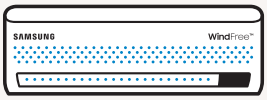

Samsung WindFree™ technology comes onto the market, gently and evenly dispersing fresh air through thousands of micro-holes to limit cold drafts.

2021

Samsung launches the sixth generation of its Digital Variable Multi the DVM S2 equipped with AI technology, enhanced energy efficiency performance, easier installation and serviceability.

WindFree™
WindFree™ Cooling

SmartThings
Wi-Fi Control

b.IoT
Building Management System

Our flagship innovations that enrich people's lives

Our European footprint with the locations from which we operate

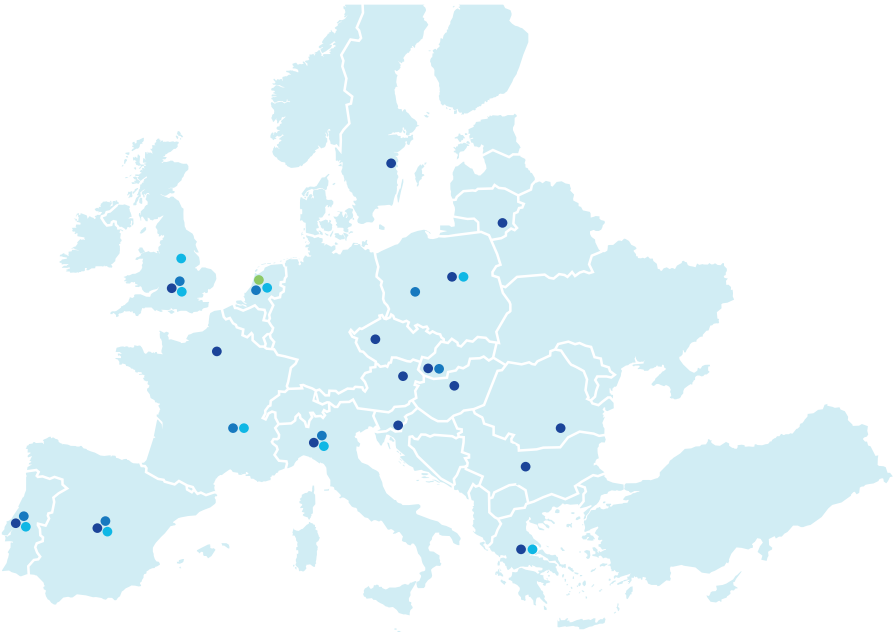

- 1 | Samsung Electronics Air Conditioner Europe B.V.
- 16 | Samsung offices
- 8 | Warehouses
- 9 | Training centres

Samsung reference projects in the spotlight
Aria Hotel, Budapest

Management Team

Aria Hotel Budapest

Aria Hotel is an iconic luxury boutique hotel in downtown Budapest, Hungary where one may frequently encounter Hollywood stars, world-famous pop singers, and other celebrities from all around the world. The hotel is one of the six hotels belonging to the award-winning The Library Collection, a hotel chain famous for unique interior design and an exquisite attention to details. The interior design of Aria Hotel Budapest was, for example, inspired by music: a spectacular piano is placed in the centre of the lobby, and the rooms are organized around different musical genres. The hotel combines the lavish atmosphere of a historic Hungarian palace while also embracing visitors in the warmth and comfort of a private residence.

Various Samsung systems have been running in the hotel since its opening in 2015. Gábor Fodor, Operational Manager of Aria Hotel Budapest explains "Thanks to the central control, we can reach every single unit on the same system from our control room. The hydro units provide hot water for the rooms, the kitchen and the spa. The air handling units supply fresh air, and the ducted indoor units are responsible for the cooling and heating of the rooms. We really love working with the Samsung systems because of their high level of efficiency and the intuitiveness of the units. We can safely rely on Samsung for the technical needs of our facility. They definitely help make our lives easier so we can focus on the wellbeing of our guests."

Application

Hotel

Samsung products installed

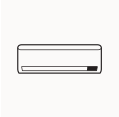

Wall-Mounted

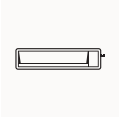

Duct

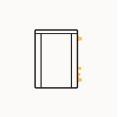

Hydro unit

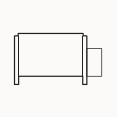

Floor

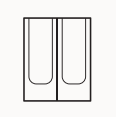

DVM S

Regulations and standards

We monitor applicable environmental standards and laws and regulations in the context of our climate solutions operations. Samsung also conducts environmental improvement activities across all product development, production, distribution, use and disposal phases.

Ecodesign

The Ecodesign Directive for Energy Related Products (ErP) aims to raise awareness about the energy efficiency of products, while stimulating manufacturers to make their products more energy efficient from the design phase. The Directive is applicable to a broad range of cooling and heating products, which have been divided into different lots.

LOT 10 was implemented on 1 January 2013 and covers air conditioners with a capacity less than 12 kW, typically residential or light commercial systems. It requires manufacturers to provide highly visible information regarding energy efficiency, including an energy label. LOT 1 and 2 took effect on 26 September 2015 and include residential air to water heat pumps for space heating and hot water production respectively (< 400 kW). It is mandatory to provide energy labels for products with a capacity less than 70 kW. On 1 January 2018, LOT 21 came into force. LOT 21 covers commercial cooling and heating products with a capacity greater than 12 kW. It does not require manufacturers to publish energy labels, but energy performance data should be made available online.

	LOTS 1/2	LOT 10	LOT 21
In effect since	26 September 2015	1 January 2013	1 January 2018
Applicable products	A2W heat pumps < 400 kW	Air conditioners < 12 kW	Air conditioners > 12 kW
Energy label required	✓	✓	
Samsung product range	EHS	RAC | FJM | CAC	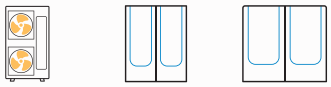 CAC | DVM | HVM

F-Gas regulation

The EU aims to reduce the environmental impact of F-gases through the reduction of the CO_2 equivalent consumption of HFCs (hydrofluorocarbons). EU regulation 517/2014 prescribes a phase-down of HFCs, where the quantities of HFCs that are placed on the market are gradually reduced through the allocation of quotas by the European Commission. The phase-down targets are expressed in CO_2 equivalents (= kg x GWP – Global Warming Potential) and aim to reduce HFC consumption by 79 % in 2030. For new installations of single split air conditioners with a refrigerant charge below 3 kg, the GWP limit is set at 750 starting in 2025. The regulation has been put into force to motivate the industry and its users to transition to refrigerants with a lower GWP. Samsung is accelerating the transition towards lower GWP refrigerants, such as R32, and will continue its investments in environmentally friendly alternatives.

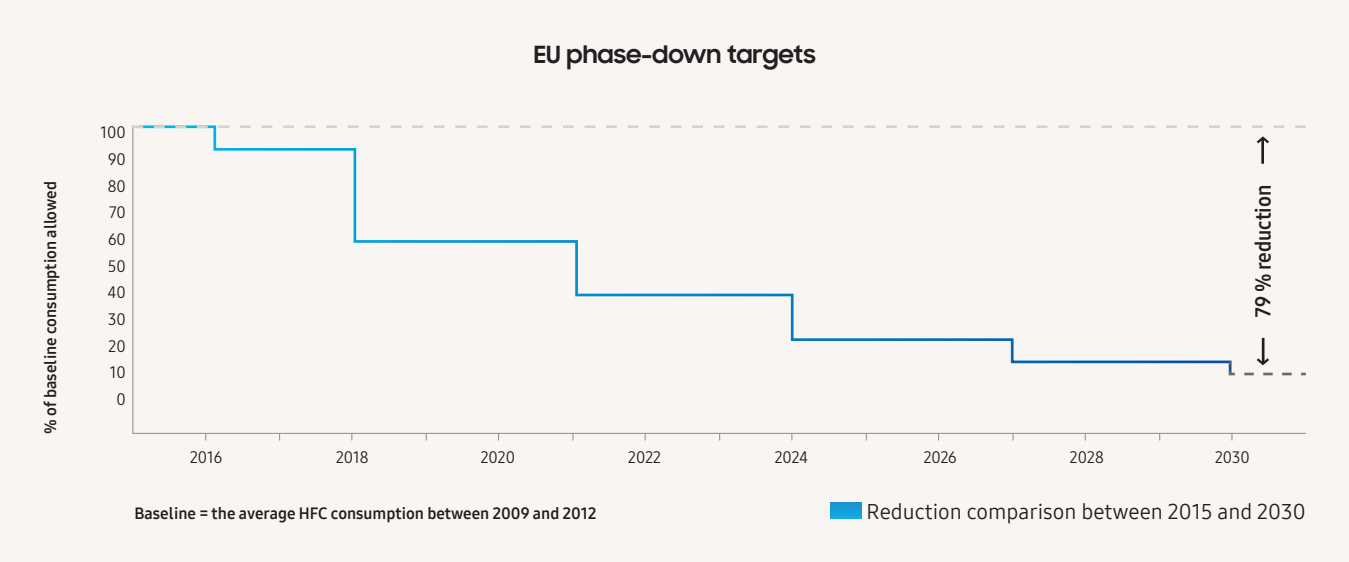

EN378 standard

Effective since 31 May 2017, the European EN378 standard provides guidance for companies who design, install, operate and maintain air conditioners, heat pumps and similar systems that use refrigerants. Based on the access characteristics of occupied spaces into which a refrigerant could leak, and an assessment of the refrigerant's toxicity and flammability, refrigerant charge limits are set and safety measures are prescribed to mitigate risk in the possible event of a refrigerant leakage.

Access categories range from general access areas, such as hotels, restaurants and shopping areas, to more restricted supervised and authorised areas.

The location of refrigerant systems follows a classification of four classes, where VRF systems are typically defined as Class II, either located in a machine room or in the open air. Subject to the available ventilation in rooms, additional measures may be needed such as mechanical ventilation or detectors.

Samsung offers specialist support to professionals in the design of cooling and heating installations. Please contact your Samsung representative to enquire about support in aligning your project design with the requirements of the EN378 standard.

WEEE: Electronic Waste

Samsung adheres to the WEEE (Waste Electrical and Electronic Equipment) Directive. This Directive applies to the principles of extended producer responsibility. It stipulates the safe collection, treatment, recycling and environmentally sound disposal of all electrical and electronic equipment. By working with collective recycling schemes in each EU member state Samsung co-finances the take-back and recycling of electronic products.

Batteries

Samsung has been giving new life to used batteries by funding collection, treatment and recycling by local battery recycling organisations.

Packaging

Samsung works together with recycling schemes and governmental organisations to collect, separate and reuse all packaging materials at various points in the distribution chain. Many materials can be recycled into new products and recycling helps to save natural resources. Recycling packaging helps to reuse valuable raw materials and to reduce the overall impact on the environment.

DO IT

Certifications

Intertek

Intertek is a leading Total Quality Assurance provider to industries worldwide verifying air quality[1]. To deliver credibility, Intertek maintains extensive global accreditations and recognitions for testing and certification services. Working with Intertek helps showcase and maintain products' safety and performance attributes. Intertek's expertise in regulatory standards and certifications keeps you ahead of changes and challenges.

Intertek offers certification programmes that achieve market entry into a variety of global destinations, programmes for a more eco-friendly environment and also programmes to verify social accountability compliance for both manufacturers and suppliers.

Samsung's Tri-Care Filter, Air Purification Panels for WindFree™ Pure PM 1.0, WindFree™ 1-Way Cassette, WindFree™ 4-Way Cassette and 360 Cassette have been verified by Intertek.

intertek
Total Quality. Assured.

Eurovent

Eurovent is globally known for its quality mark 'Eurovent Certified Performance' which certifies performance ratings of air-conditioning and refrigeration products according to European and international standards. The 'Eurovent Certified Performance' mark indicates that the prescribed quality requirement has been fulfilled and should not require the need to be proven after the customer's decision and after the manufacturer's production process.

Eurovent is an accredited third-party certification body. It builds customer confidence by leveling the competitive playing field for all manufacturers and by increasing the integrity and accuracy of the industrial performance ratings. Thus providing trustworthy services to the entire ecosystem.

Samsung air conditioning products ranging from the Single Split (RAC), Multi Split (FJM), Commercial Split (CAC), Variable Refrigerant Flow (VRF) and Eco Heating System (EHS) line-up in the 'Air–to–Water' (A2W) heat pump category are all Eurovent certified.

To check the ongoing validity of the Eurovent certified products from Samsung, please visit: www.eurovent-certification.com

EUROVENT
CERTIFIED
PERFORMANCE
www.eurovent-certification.com

[1] Our products have not been tested for their effects on the COVID-19 virus. Therefore, we do not make or give any express or implied claims or guarantees with regard to COVID-19.

Innovations in detail

DVM S2

Higher Energy Efficiency

The DVM S2 is equipped with four innovative technology components that together result in the DVM S2 delivering greater energy efficiency.

The enlarged Heat Exchanger can transfer more energy at once, and its optimized refrigerant path maximizes the transfer rate while minimizing any loss. These heat exchanger allow for 36.2 % greater heat transfer area on the smaller platform[1] and 23.7 % greater heat transfer on the larger platform[2]. The power module which is an integral part of the inverter system is improved as it lowers heat dissipation and saves energy.

The aerodynamic Multi-serration Fan minimizes the turbulence of the air vortex, which reduces the air resistance. The high efficiency Multi-Serration fan lowers power consumption by 32 % while providing more airflow[3]. The unit uses a superior Samsung scroll compressor which makes the unit more energy efficient compared to the current DVM S range.

The High-efficiency IGBT (Insulated Gate Bipolar Transistor) reduces the loss of conducted electricity.

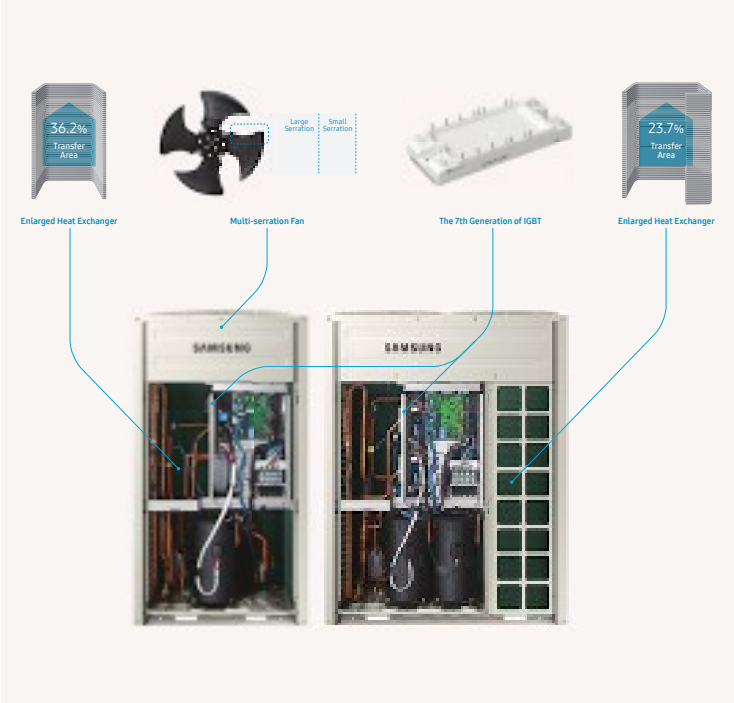

[1] DVM S2 equipped with larger heat exchanger than conventional model AM100JXVAGH/ET. HX Length: 1,700 mm → 1,910 mm. Platform Width : 880 → 930 [mm].
[2] DVM S2 equipped with larger heat exchanger than conventional model AM200KXVAGH/ET. HX Length:2,100 mm → 2,600 mm.
[3] Multi serration fan adopted for small platform. Based on 12 HP models comparison.

Active AI Technology

By learning usage patterns from recent operations and the surrounding conditions, the DVM S2 proactively creates, optimizes and maintains the most comfortable environment, while reducing energy consumption. The Active AI feature recognizes the conditions of the installed environments, while supplying optimized cooling[1] and heating performance, and real time refrigerant leakage monitoring based on advanced algorithms.

Active AI Pressure Control automatically adjusts the compression pressure to suit the conditions of each installation site and to reduce energy usage. The DVM S2 learns patterns of cooling operation and reaches rapidly to target low pressure, therefore resulting in faster cooling and comfort[1]. Benefit of high pressure AI control is that it can adjust the optimal high pressure and reduce unnecessary high pressure, thereby improving power consumption and energy[2].

Active AI Defrost analyzes various operating data and defrosts more precisely. As a result, it reduces wasted energy and increases the continuous heating time. The active AI component can also with the help of the algorithm learn the current fan motors, temperature and defrost timing as well.

The Active AI Refrigerant Analysis monitors the refrigerant level by analyzing various operating data from the outdoor unit, and helps maintain the optimal amount of refrigerant by alarming before the problem occurs.

[1] 20 % faster cooling based on internal testing of the cooling operation, with the temperature set at 22 °C and using Auto mode for 4 hours, at a room temperature of 33 °C and an external temperature of 35 °C. The tested model was an AM080AXVGGH/EU connected to AM083NN4BHD1 and AM145NN4DBH1 indoor units with 25 m of piping. The elapsed times were measured when the room temperate reached 25 °C.
[2] 15 % energy consumption is reduced with an AM080AXVGGH/EU outdoor unit connected to AM083NN4BHD1 and AM145NN4DBH1 indoor units with 25 m of piping, using the cooling operation in Auto mode for 4 hours with an external temperature of 30 °C and a set temperature of 22 °C. Results may vary depending on the actual installation and usage conditions, such as the piping length, elevation and external temperature.

Slimmer Liquid Line - (Optional Diameter Reduction)

The DVM S2 requires less refrigerant as it can use a slimmer liquid line[1]. So, it saves costs on the installation and maintenance of refrigerant and piping materials. In addition, the decreasing of pipes can result in refrigerant reduction by 28 %[2]. As long as the maximum piping length is met it is possible to install a liquid line pipe with a diameter that is one level smaller for the main run. This allows you to save on pipe and refrigerant usage.

[1] A slimmer liquid line can be used between an outdoor unit and the first branch of indoor units. The diameter of the slimmer pipe will vary depending on the diameter of the pipe that is normally used. It may not be available in certain installation conditions, and is not compatible with certain AI functions of outdoor units. Please contact Samsung's technical professionals regarding its availability and for more detailed information.

[2] Based on internal measurements. When a slimmer pipe, instead of a normal pipe, is used for the Main Liquid Pipe on the same capacity of air conditioning system, the amount of refrigerant to be charged can be reduced by 28 % on average.

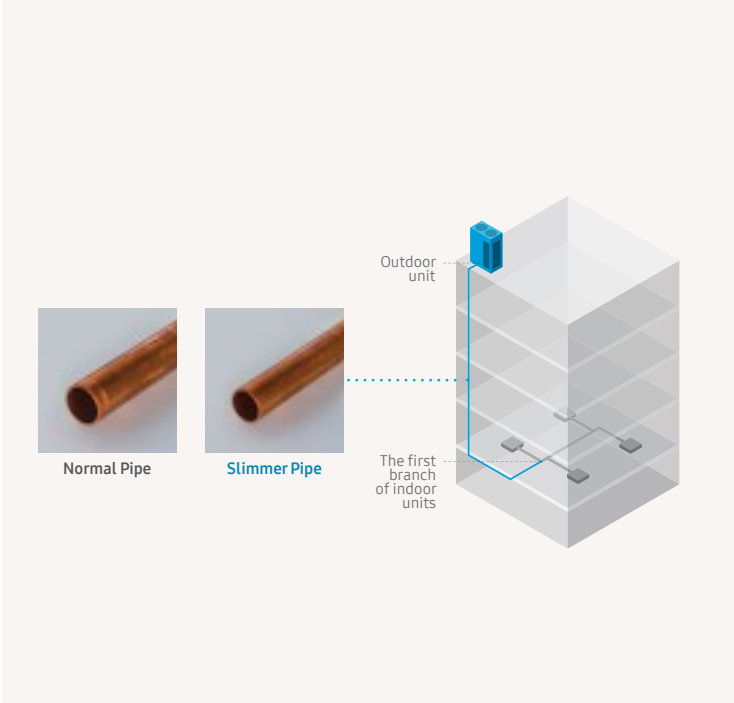

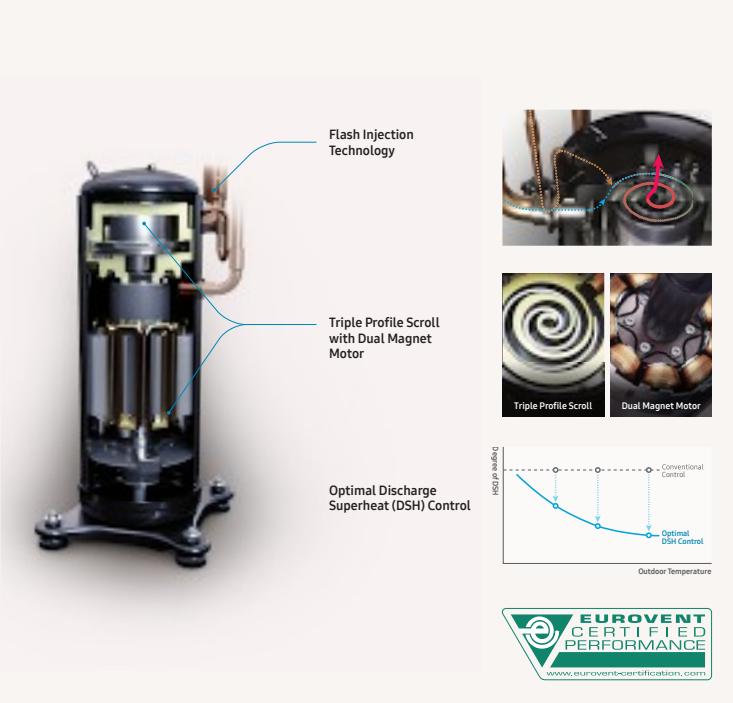

AFI (Advanced Flash Injection) Compressor™

The Samsung AFI Compressor™ combines Flash Injection Technology with a strengthened Triple Profile Wrap and Optimal Discharge Superheat Control technology. It delivers a new level of comfort by maintaining pleasantly cool or warm conditions in every corner of a building all year round.

Flash Injection Technology increases the flow of refrigerant. So, the compressor continues working reliably, improving the heating performance even at low temperatures.

Triple Profile Scroll creates a much larger chamber and can withstand higher pressure while rotating reliably at high speed. Combining it with a Dual Magnet Motor, which increases the rotary power, creates the world's largest displacement volume[1].

Optimal Discharge Superheat (DSH) Control automatically adjusts the degree of discharge superheat to heat more efficiently and effectively compared to the previous generation of DVM S.

[1] Samsung circulates 14,400 cc/sec refrigerant (= 90 cc (displacement volume) x 160 rps (revolutions per second)), while Company A circulates 12,480cc/sec (= 96cc x 130rps), Company B circulates 14,080cc/sec (= 88cc x 160rps) and Company C circulates 12,320cc/sec (=88cc x 140rps).

Innovations in detail

DVM S2

Enhanced Emergency Operation

When the air conditioning system consists of multiple Samsung DVM S2 outdoor units, its refrigerant regulating control technology ensures that you can continue working using only one compressor in an emergency.

So, if every unit except one is not working or getting serviced and any compressor on the remaining one is working properly, it will keep cooling or heating for up to 8 hours. It ensures that you can maintain a comfortable indoor environment until the whole system is functioning properly again.

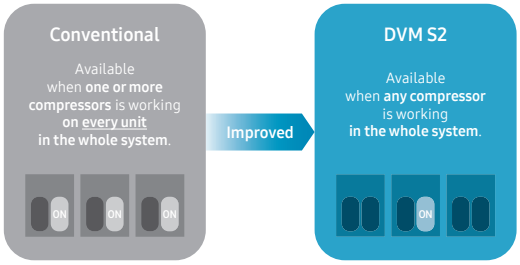

Example Cases of Malfunction	Emergency Operation	
	Conventional	DVM S2
When there are 2 or more units in a system, and one of the two compressors on a unit is not working.	Yes	Yes
When there are 2 or more units in a system, and one of the two compressors on each unit is not working.	Yes	Yes
When there are 2 or more units in a system, and all of the compressors on a unit are not working.	Not Available	Yes
When there are 2 or more units in a system, and a compressor on a low capacity unit is not working.	Not Available	Yes
When there are 2 or more units in a system, and a compressor on a low capacity unit and one of the two compressors on another unit are not working.	Not Available	Yes
When there is 1 unit in a system, and one of the two compressors on it is not working.	Not Available	Yes

Stable Performance in a Wide Range of Temperatures

The DVM S2 operates in a wider range of weather conditions, delivering a more stable performance compared to the first generation of DVM S. It operates across a wide temperature spectrum. It can cool during a heat of up to 50 °C and provide warmth during freezing cold conditions of up to -25 °C, ensuring a constant comfortable indoor environment throughout the year.

The wide operating range is particularly helpful as most DVM S2 will be installed on the rooftop of a building. Here the unit is directly exposed to sunlight and the radiant heat of the rooftop as well as to the discharged air of the other outdoor units.

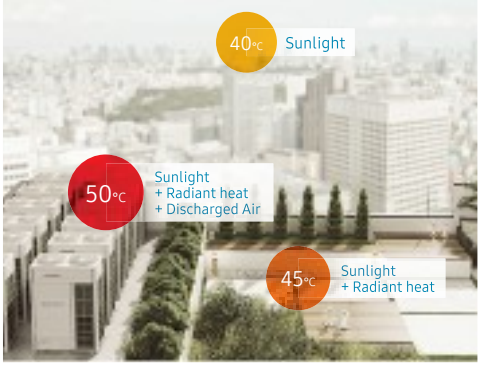

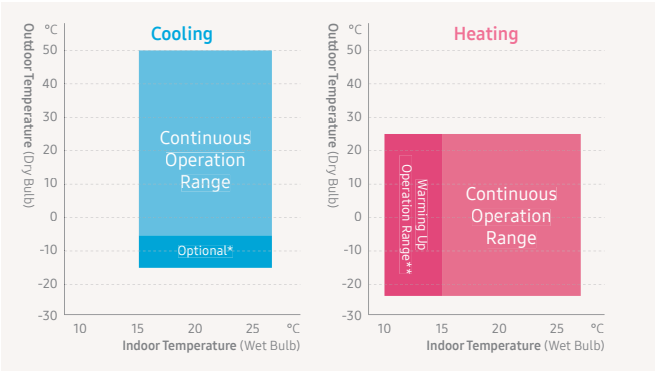

* When the 'Expand Operational Temperature Range' option is applied; the low limit of the cooling operation range can be expanded from -5°C to -15°C. Only available on HR models and under certain conditions.
** If the indoor temperature is lower than 15°C, it can work in heating mode but it cannot operate continuously due to a protection control, delivering thus a more stable performance than the DVM S.

Lasting Performance in Challenging Weather Conditions

The Samsung DVM S2 is equipped with the new and innovative design features that are proven to significantly enhance its durability[1]. These include the robust frame, the Kammtail motor bracket and an improved structure of the legs of the unit.

In addition, it features anti-corrosion capabilities on the heat exchanger and chassis, due to the new Durafin™ Ultra fin coating, and the Galvanized Iron Steel Plate casing with a PE powder coating of up to 100μm thickness. These features were proven to ensure a maximum durability in challenging weather conditions.[2]

[1] Based on a test in accordance with ICC ES AC156 : 2010 (SDS=2.5g, z/h=1), conducted by SGS Korea Co., Ltd. Result Report No.: SGS-R20-1599-KR00
[2] Based on internal testing using corrosion chambers, Q-FOG and CCT-1100. The Complex Cycle Test (ICCT) includes cycles of spray (for 2 hours at 35 °Celsius), dry (for 4 hours at 60 °C s with 30% Relative Humidity) and damp (for 2 hours at 50 °C with 95% Relative Humidity) conditions. As a result, the Galvanized Iron Steel Plate (GI) formed red rust after 240 hours, which is 43% slower than general Electro-Galvanized Steel Plate (EGI), which forms red rust after168 hours.

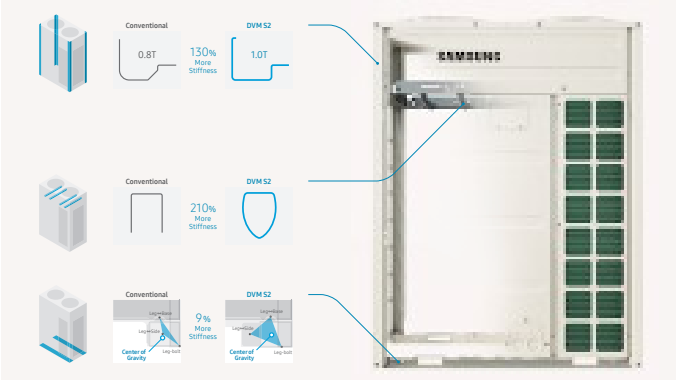

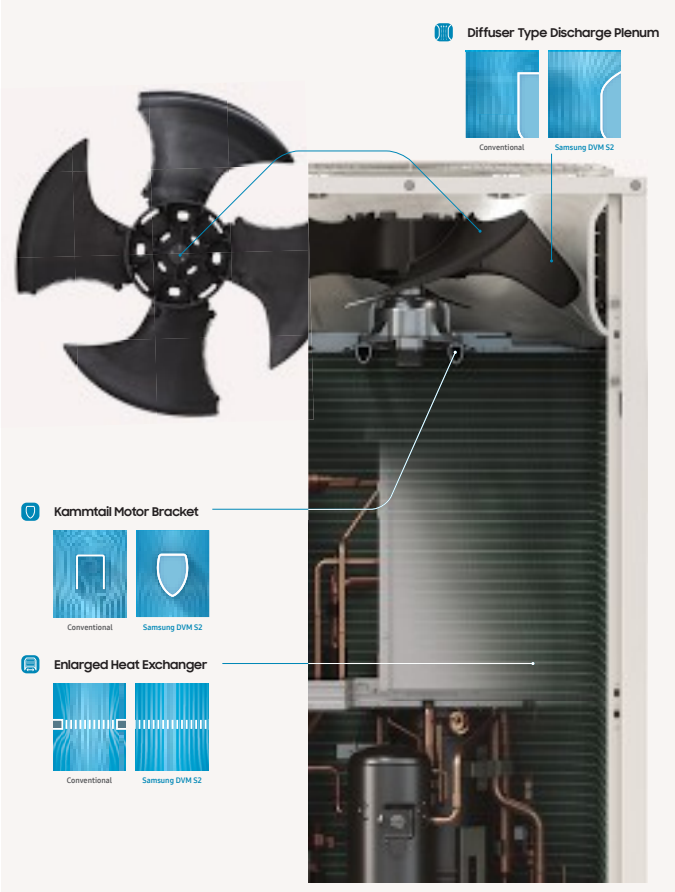

Quiet operation: improvements on core elements

The DVM S2 reduces fan noise by minimizing the air vortex due to the unique Multi-serration Fan[1]. In addition, it works quietly and efficiently at night due to its quiet operation feature.

Along with the Multi-serration Fan, the Samsung DVM S2 includes a new range of technologies that support the unit's air flow optimization, namely: the Diffuser Type Discharge Plenum, Kammtail Motor Bracket and the Enlarged Heat Exchanger. Thanks to these technologies the air flows smoothly and quickly, minimizing the turbulence of the air vortex, thus resulting in less noise[2].

[1] Only available on model of 33.6W or less. The shape of the fan may vary by model and region.
[2] Based on internal testing and stimulation using a fluid dynamics software, Ansys CFX. Results may vary depending on the actual usage conditions.

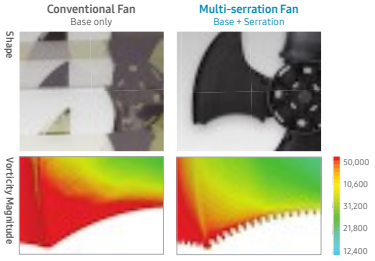

Comparison of vorticity based on the design of the edge

Innovations in detail

DVM S2

Extended Installation Flexibility

The Samsung DVM S2 maximizes space without compromising on the quality of its performance. It is 33%[1] smaller compared to the previous DVM S generation. The DVM S2 compact design enables outdoor units to be installed even inside the building. This can be especially important for high-rise buildings. It can result in freeing up valuable amounts of space. The DVM S2 is designed to enhance installation flexibility within the building, due to the 110Pa External Static Pressure[2]. This function effectively discharges air through a longer duct, making it a suitable choice for high-rise buildings.

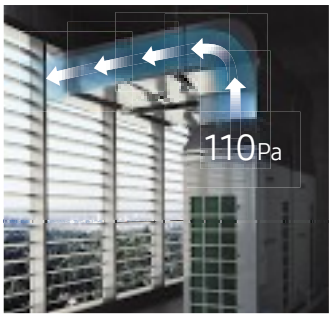

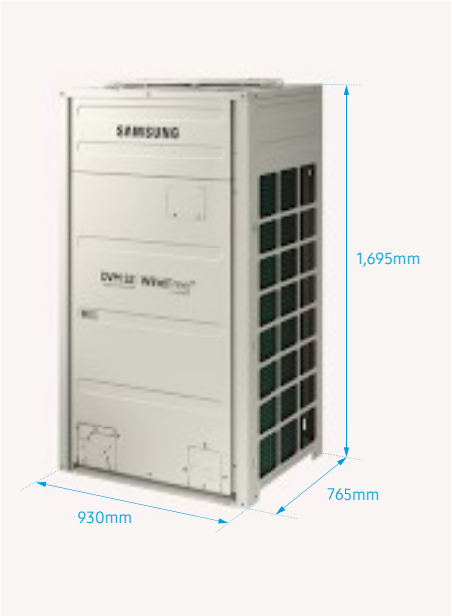

[1] Based on the AM140AXVAGH/EU, compared to the same capacity models of companies.
[2] May vary by model and depending on the actual condition of the ductwork and installation location. For more detailed information, please contact Samsung's technical professionals.

Convenient handling

The Samsung DVM S2 is designed to increase convenience with its updated features: the Center Point Indicator of Weight and the Simplified Cover with Handle, making it easier to transfer, install and service, while securing more safety with less effort.

In addition, it includes a service window that can be accessed easily when servicing, without opening the whole cabinet.

Fewer parts, less effort and cost for service

The Samsung DVM S2 consists of optimized modular components that come in fewer parts compared to the previous generation of Samsung's DVM S.

Based on its Quality-based Modular Design (QMD), the DVM S2 is built with high-quality modules that were preselected and preconfigured. It delivers both superior performance and reliability. Additionally, it saves up significant warehouse space, as it does not come in multiple parts.

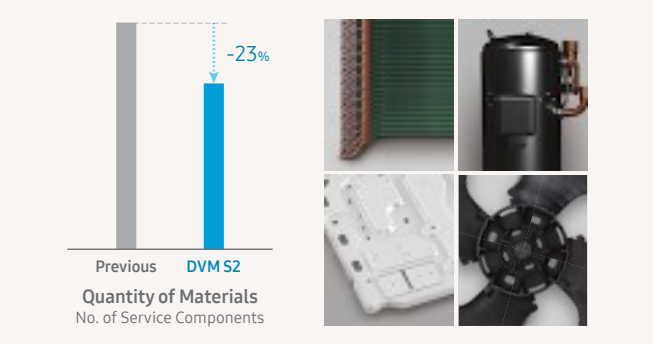

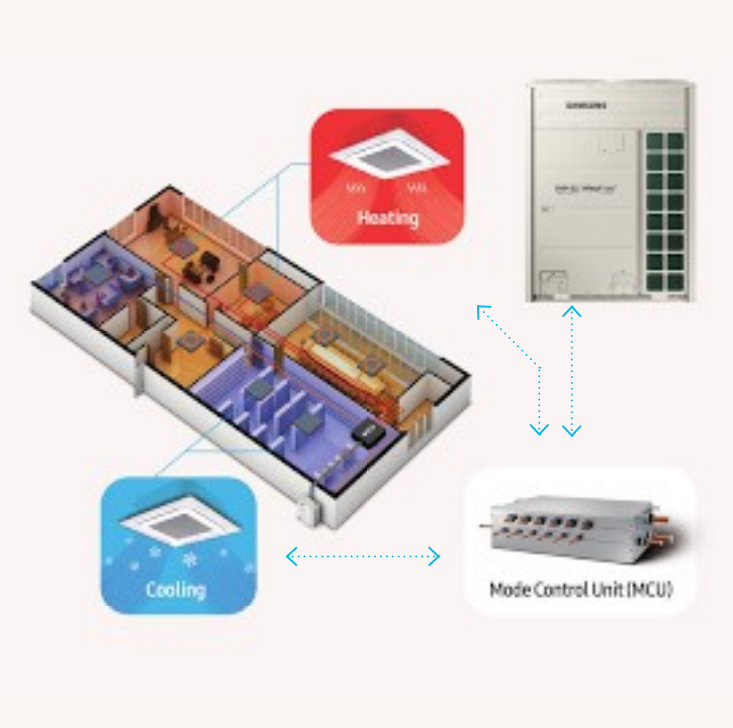

Independently Cools and Heats Multiple Spaces

An indoor unit connects to a 3-pipe Heat Recovery outdoor unit, which heats and cools independently using a Mode Control Unit (MCU). MCUs are available in configurations ranging from 2 to 6 ports and can be piped together. This allows for up to 64 indoor unit connections to a single DVM S2 system (where specifications allow).

SAMSUNG
DVM S2 | WindFree™

SAMSUNG
DVM S2 WindFree™

Innovations in detail

DVM S Eco

High capacity in a compact design

DVM S Eco combines a high capacity up to 12 HP. It is one of the most compact air conditioner units in its class today, making the DVM S Eco very easy and economical to install and operate without compromising on performance. It makes good use of valuable space with a compact design. With a height of just 1210 mm and a small footprint of only 0.318m², its overall volume is 5% less than competing models[1]. It makes it a convenient space-saving option in offices and can be installed easily in a wide range of locations.

[1] Based on internal testing. Height comparison in 6HP models: Samsung DVM S ECO = 1210mmm vs. Model of a competing brand = 1380mm.

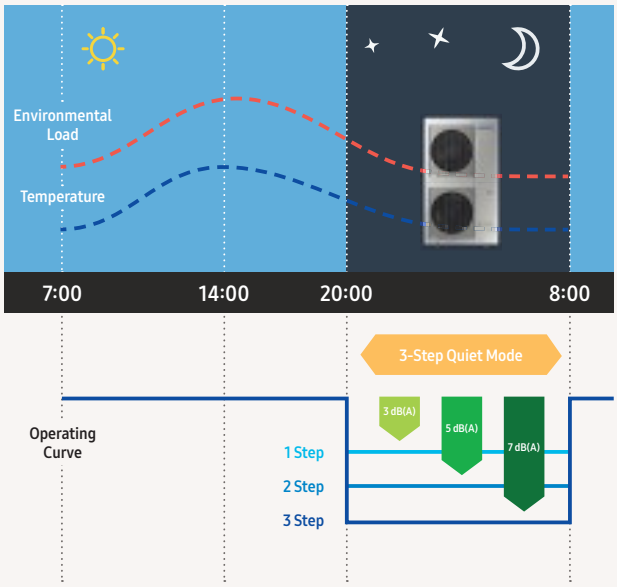

Silent mode

By producing less noise than conventional models, the DVM S Eco imposes fewer distractions on residential and working environments. Its compact, unimposing design and specially shaped fan blades help reduce sound levels in 3 steps, creating a more pleasant environment.

Additionally, its quiet operation during the night creates a restful environment with a reduced noise level of 3–7 dB(A)[1].

[1] Based on internal testing comparing silent mode with regular operating mode. Sound pressure level is obtained in an anechoic room. Sound pressure level is a relative value, depending on the distance and acoustic environment. Sound pressure level may differ depending on operation conditions. Silent mode is available by option setting.

DVM S Water

Optimal Water Flow Controller

The DVM S Water comes with a built-in Water Flow Controller that helps control the amount of water used to cool and heat an outdoor unit. The optimum flow of water is automatically determined by the temperature of the indoor space, making for minimum energy consumption at optimum standards, at reduced costs. And because this feature is standard, there is no need for a separate water flow control kit.

Geothermal applications

Using a highly efficient compressor and heat exchanger, DVM S Water gives an effective and reliable performance, despite any changes to its environment. DVM S Water uses water as a means of heat exchange, and can be connected to various sources such as cooling towers, boilers, geothermal loops, lakes, ponds, soil, seawater and more. Its long piping and lightweight design make it easy and economical to install almost anywhere.

Innovations in detail

Heat Recovery for DVM

Compact Heat Recovery solution

The Heat Recovery (HR) feature for Samsung DVM S ECO and DVM S High EER is designed to control temperatures in multiple spaces at once. Optimised for small hotels and residential buildings, it can provide cooling and heating for up to 10 indoor units simultaneously.

An HR Changer is used to convert a DVM S Eco Heat Pump (4, 5 and 6 HP) to a Heat Recovery (HR) model, which can be connected to a multiport Mode Control Unit (MCU).

HVM Chiller

Modular Function

HVM Chiller heat pump outdoor units are available in three different sizes: 42/56/65 kW. A maximum of 16 outdoor units can be connected to achieve a maximum capacity of 1,040 kW. By connecting multiple units within a single system, the workload is adjusted automatically for maximum efficiency.

The HVM system's water-based concept eliminates the need for refrigerant inside the building, making it safer than traditional VRF systems. Its refrigerant charge is up to 65 % lower[1] than in traditional VRF systems.

[1] Compared to a Samsung DVM S 60 HP, holding R410A refrigerant, connected to twelve 14 kW indoor units and 100 metres of pipes.

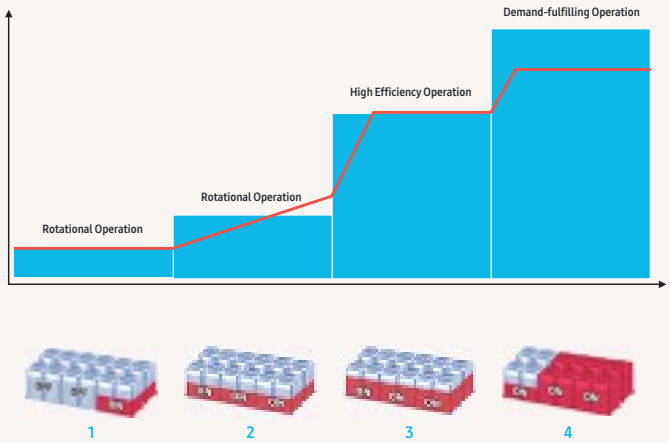

1. At low load, the varying outdoor units are switched on at alternate intervals
2/3. At average load, the outdoor units are operated at partial load to optimise efficiency
4. At maximum load, all compressors of all outdoor units are operated at maximum capacity

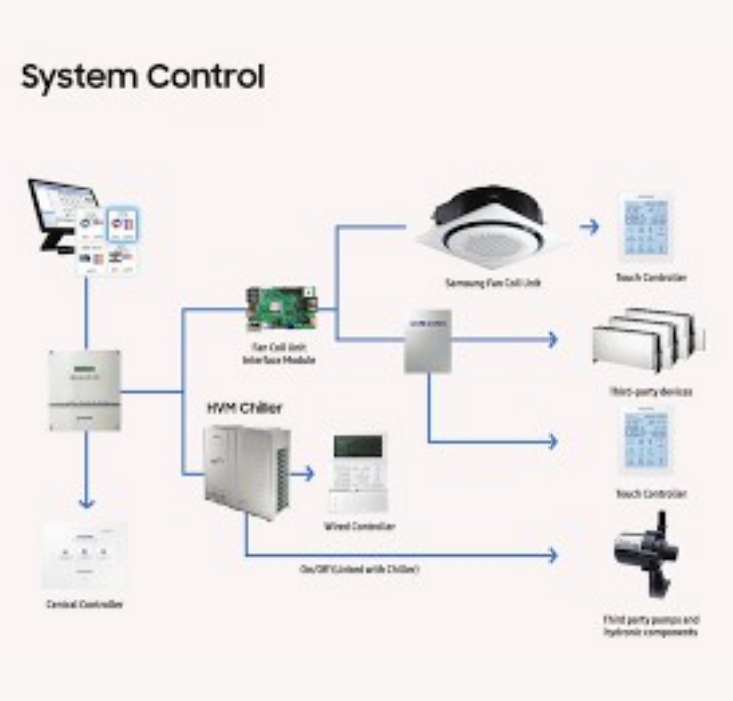

Local and centralised controls

The DVM Chiller utilises the same integrated control systems as a VRF system, and can be connected to a third-party Building Management System (BMS). With the use of the Fan Coil Unit (FCU) kit, third-party indoor units and control systems can also be connected. The Samsung DMS 2.5 makes control and maintenance easy.

015

Innovations in detail

LSP Slim Duct

Slim design for small ceiling spaces

The Slim Duct S is 200 mm in height, making it much narrower than conventional products. This allows for easy installation and maintenance in all kinds of spaces.[1]

[1] Based on the AM017~071*NLD*H/EU

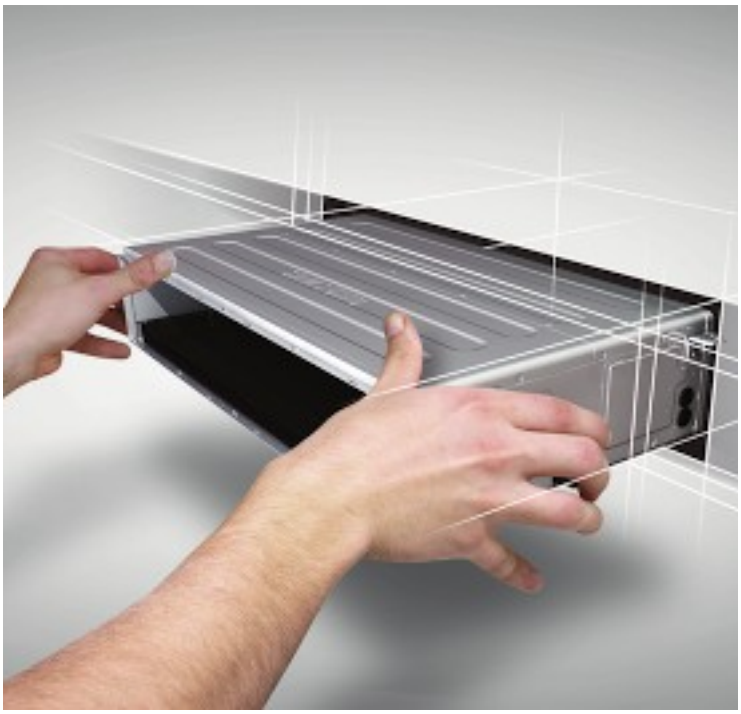

Built-in drain pump[1]

A check valve on the drain pump prevents drained water from flowing back into the drain pan, minimising the water level in the drain pan. This modern design feature means no water stagnation, and prevents drain water overflowing into your interiors.

[1] Based on models AM***KNLDEH/EU, AM***MNLD*H/EU

Innovations in detail

MSP/HSP Duct S[1]

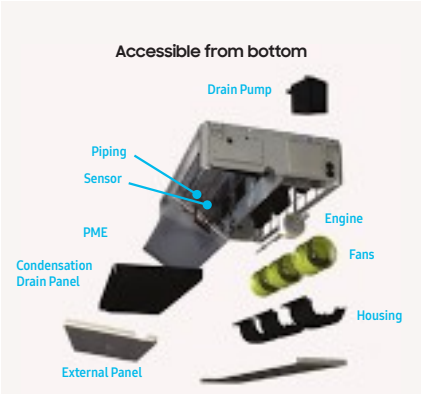

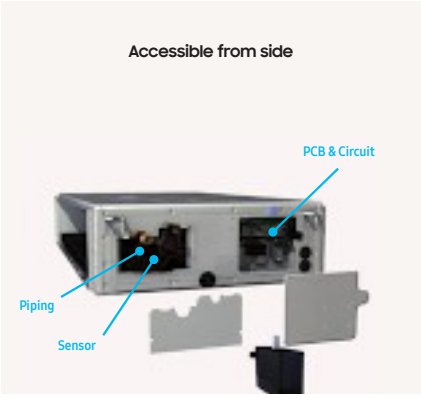

Easy installation and maintenance

Thanks to their ultra-compact design, Samsung duct units can be placed anywhere. This makes for easy installation and maintenance. The indoor unit can be accessed from three directions: from the top, bottom and one side, making maintenance simpler than ever.

Indoor discharge temperature

Each ducted indoor unit, or Air Handling Unit (AHU) kit, boosts discharge air temperature control function that offers greater comfort without the need to change the outdoor unit setting. Cooling and heating options can be selected using a remote control, and this applies to all ducted/AHU connected systems.

[1] Based on model AM***AN*PKH/EU

Automatic External Static Pressure (ESP) setting

The automatic operation of the external static pressure feature is very simple to set up.

This auto setting enables you to choose the optimal operating range for the fan. The result is the greatest possible comfort with an optimal balance between sound level and capacity. Please contact your Samsung representative to find out which indoor units feature this function.

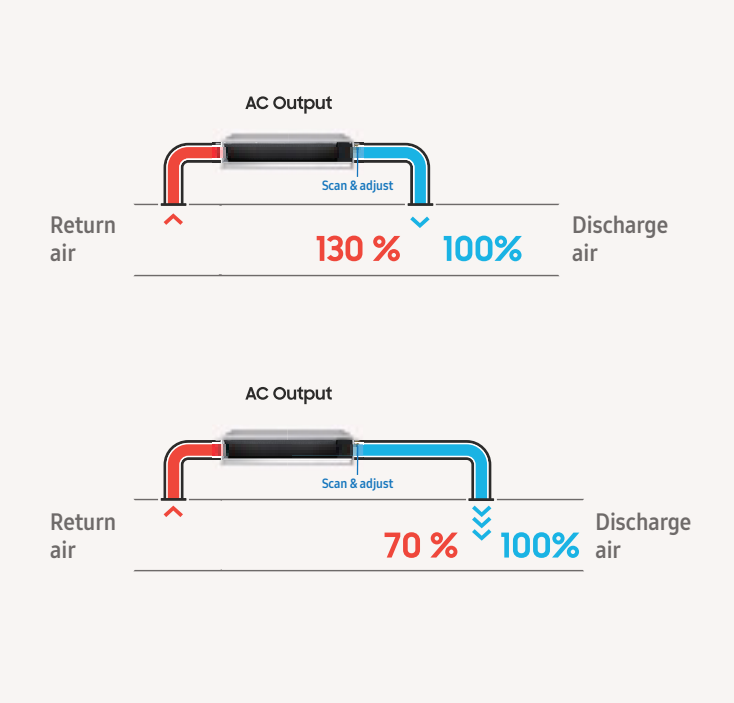

Installation flexibility and easy maintenance with a lightweight and compact Slim Fit design

The compact and lightweight Slim Fit Design allows you to fit your air conditioner unit into small spaces, thus facilitating its handling as well as the set up. This means you can now install it in most places within a building with minimum difficulty.

Innovations in detail

Airzone

Integrated Zoning Solution

Airzone provides centralised control and improvement in energy performance to Samsung ducted applications.

This third party solution offers the possibility to control the temperature of up to 8 zones or rooms separately. The Airzone plenum with dampers determines the required airflow to each room to meet the desired temperature.

Airzone's multiple zoning control solution can be easily connected to Samsung's ducted systems and allows for a reduction in maintenance operations and refrigerant charge compared to installing separate AC units for each zone.

Unlike other third party solutions, Airzone uses Samsung's communication protocol to control the needed airflow. If there is no demand, the indoor unit is stopped. This avoids unwanted operation; therefore increases the energy efficiency of the system.

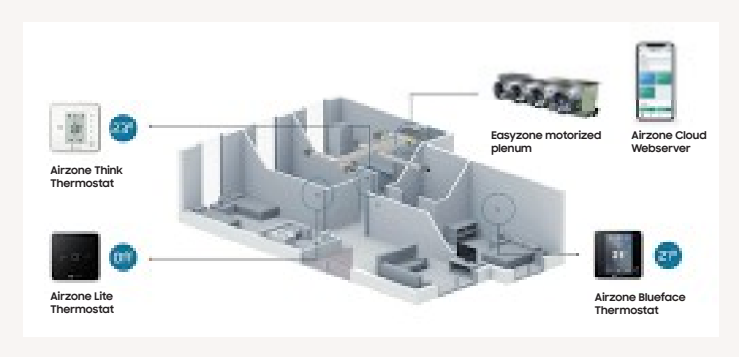

Flexibility and Smart Operation

The integrated zoning system from Airzone with smart control allows for optimized energy efficiency, as temperatures in the different zones can be independently controlled. This translates into energy efficiency since the AC unit will not unnecessarily cool or heat unoccupied zones.

Each damper is controlled by an Airzone room controller either wired or wireless. In addition, Airzone also allows controlling the room temperature remotely with the Airzone Cloud App[1], Google Assistant[2,3] and Amazon Alexa[2,4].

works with amazon alexa

works with Hey Google

[1] Available for iOS and Android
[2] Voice control is supported by AI speakers; Google Assistant (Google Home) and Amazon Alexa
[3] Google Assistant is not available in certain languages and countries. Google is a trademark of Google LLC
[4] Airzone is not compatible with SmartThings and SmartThings App

Airzone[5] compatible models

Product Group	Samsung Model Code	Detail	Dimensions (W×H×D)	3 Port	4 Port	5 Port	6 Port	8 Port
DVM	AM017ANLDKH/EU	DUCT LSP 1.7kW	700×199×440	AZEZ8SAMSL03S3				
DVM	AM022ANLDKH/EU	DUCT LSP 2.2kW	700×199×440	AZEZ8SAMSL03S3				
DVM	AM028ANLDKH/EU	DUCT LSP 2.8kW	700×199×440	AZEZ8SAMSL03S3				
DVM	AM036ANLDKH/EU	DUCT LSP 3.6kW	700×199×440	AZEZ8SAMSL03S3				
DVM	AM045ANLDKH/EU	DUCT LSP 4.5kW	700×199×440		AZEZ8SAMSL03M4			
DVM	AM056ANLDKH/EU	DUCT LSP 5.6kW	700×199×440		AZEZ8SAMSL03M4			
DVM	AM071ANLDKH/EU	DUCT LSP 7.1kW	1100×199×440			AZEZ8SAMSL03L5		
DVM	AM090ANLDKH/EU	DUCT LSP 9kW	1300×295×690			AZEZ8SAMST04L5	AZEZ8SAMST04L6	AZEZ8SAMST04L8
DVM	AM112ANLDKH/EU	DUCT LSP 11.2kW	1300×295×690			AZEZ8SAMST04L5	AZEZ8SAMST04L6	AZEZ8SAMST04L8
DVM	AM128ANLDKH/EU	DUCT LSP 12.8kW	1300×295×690					AZEZ8SAMST04XL8
DVM	AM140ANLDKH/EU	DUCT LSP 14kW	1300×295×690					AZEZ8SAMST04XL8
DVM	AM017KNLDEH/EU	DUCT LSP 1.7kW	700×199×440	AZEZ8SAMSL03S3				
DVM	AM022KNLDEH/EU	DUCT LSP 2.2kW	700×199×440	AZEZ8SAMSL03S3				
DVM	AM028KNLDEH/EU	DUCT LSP 2.8kW	700×199×440	AZEZ8SAMSL03S3				
DVM	AM036KNLDEH/EU	DUCT LSP 3.6kW	700×199×440	AZEZ8SAMSL03S3				
DVM	AM045MNLDEH/EU	DUCT LSP 4.5kW	700×199×440		AZEZ8SAMSL03M4			
DVM	AM056MNLDEH/EU	DUCT LSP 5.6kW	700×199×440		AZEZ8SAMSL03M4			
DVM	AM071MNLDEH/EU	DUCT LSP 7.1kW	1100×199×440			AZEZ8SAMSL03L5		
DVM	AM090MNLDKH/EU	DUCT LSP 9kW	1300×295×690			AZEZ8SAMST04L5	AZEZ8SAMST04L6	AZEZ8SAMST04L8
DVM	AM112MNLDKH/EU	DUCT LSP 11.2kW	1300×295×690			AZEZ8SAMST04L5	AZEZ8SAMST04L6	AZEZ8SAMST04L8
DVM	AM128MNLDKH/EU	DUCT LSP 12.8kW	1300×295×690					AZEZ8SAMST04XL8
DVM	AM140MNLDKH/EU	DUCT LSP 14kW	1300×295×690					AZEZ8SAMST04XL8
DVM	AM022ANMPKH/EU	DUCT MSP 2.2kW	850×250×700	AZEZ8SAMST06XS3				
DVM	AM028ANMPKH/EU	DUCT MSP 2.8kW	850×250×700	AZEZ8SAMST06XS3				
DVM	AM036ANMPKH/EU	DUCT MSP 3.6kW	850×250×700	AZEZ8SAMST06S3	AZEZ8SAMST06S4			
DVM	AM045ANMPKH/EU	DUCT MSP 4.5kW	850×250×700	AZEZ8SAMST06S3	AZEZ8SAMST06S4			
DVM	AM056ANMPKH/EU	DUCT MSP 5.6kW	850×250×700	AZEZ8SAMST06S3	AZEZ8SAMST06S4			
DVM	AM071ANMPKH/EU	DUCT MSP 7.1kW	850×250×700	AZEZ8SAMST06M3	AZEZ8SAMST06M4	AZEZ8SAMST06M5	AZEZ8SAMST06M6	
DVM	AM090ANMPKH/EU	DUCT MSP 9kW	1200×250×700			AZEZ8SAMST06L5	AZEZ8SAMST06L6	AZEZ8SAMST06L8
DVM	AM112ANMPKH/EU	DUCT MSP 11.2kW	1300×300×700					AZEZ8SAMST06XL8
DVM	AM128ANMPKH/EU	DUCT MSP 12.8kW	1300×300×700					AZEZ8SAMST06XL8
DVM	AM140ANMPKH/EU	DUCT MSP 14kW	1300×300×700					AZEZ8SAMST06XL8

Communication gateway for all models: AZX6GTCSA2

[5] Airzone is a third party and not part of Samsung. Airzone Plenum with damper, wired & wireless thermostats and gateway, can be purchased directly from Airzone website: https://www.airzonecontrol.com/ or contacting the Airzone sales team at marketing@airzonecontrol.com

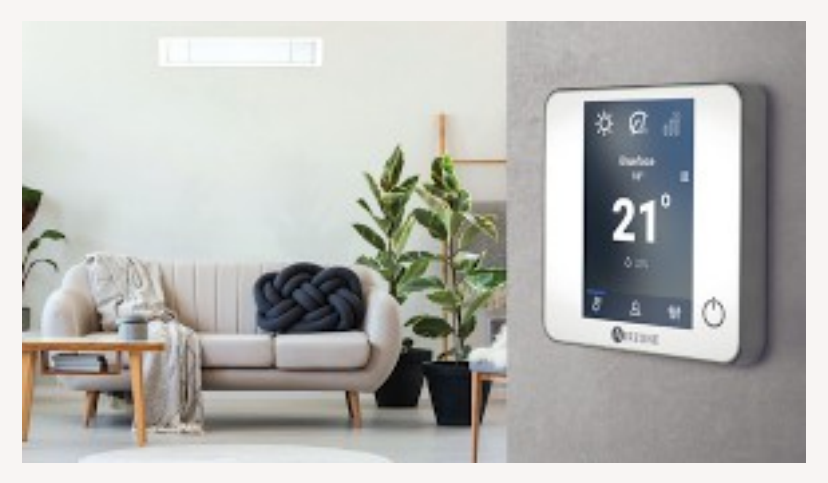

Innovations in detail

WindFree™ Deluxe

High capacity in a compact design

Samsung wall-mounted air conditioners with WindFree™ technology cool quickly from corner to corner, making people comfortable whenever they want and wherever they are. Its advanced design also features a 15 % larger fan, 18 % wider inlet and a 31 % wider blade compared to Samsung conventional model[1]. This means that cool air is dispersed farther and wider into every corner of a room, reaching up to 15 metres[2].

[1] Tested on the AM022TNVDKHEU model compared with the Samsung conventional AM022JNVDKHEU model
[2] ASHRAE (American Society of Heating, Refrigeration, and Air-Conditioning Engineers) defines "Still Air" as air currents at speeds below 0.15 m/s which lacks the presence of cold drafts.

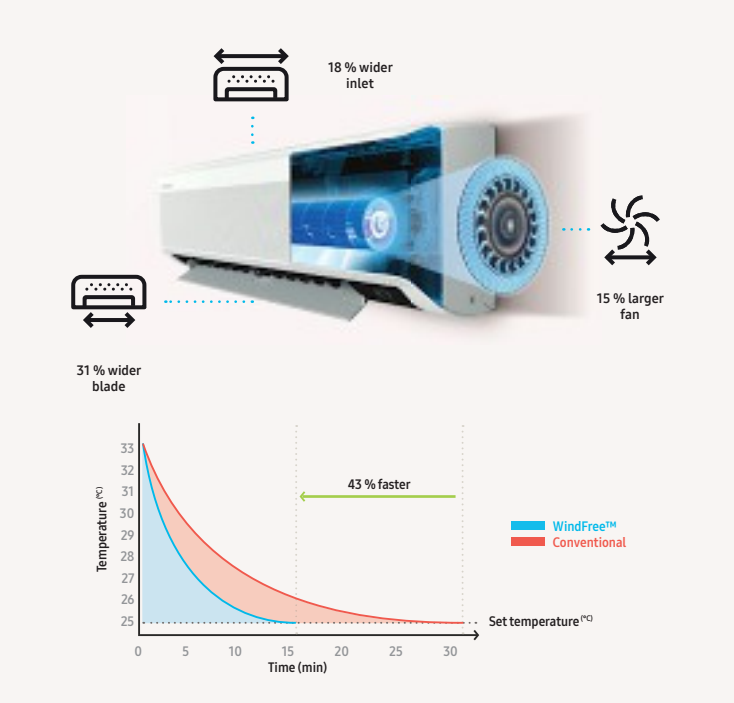

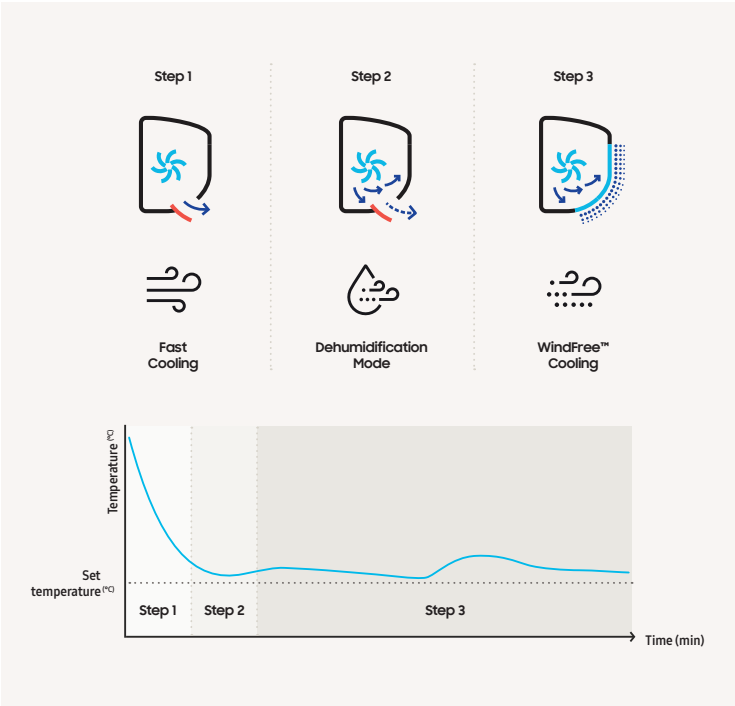

WindFree™ Cooling mode

WindFree™ Cooling mode keeps the room comfortably cool. It cools gently and quietly, dispersing air through 23,000 micro-holes so that people never have to deal with the unpleasant feeling of a cold draft on their skin. This results in a "Still Air" environment[1] with a very low air speed and limited noise[2]. The advanced airflow structure of this mode also means that it cools a wider and larger area more evenly. And it consumes 77 % less energy than Fast Cooling mode[3], so people can stay comfortably cool while reducing energy costs.

[1] ASHRAE (the American Society of Heating, Refrigerating, and Air-Conditioning Engineers) defines "Still Air" as air currents moving at speeds below 0.15 m/s, with no cold drafts.
[2] Tested on the AR12TXCAAWKNEU model in an anechoic environment. WindFree™ mode generates 23 dB(A) of noise, compared to 26 dB(A) produced by the conventional Samsung model. Sound pressure level is a relative value, depending on the distance and acoustic environment. Sound pressure level may differ according to operating conditions.
[3] Tested on the AR12TVEAAWKNAP model under specific testing conditions, based on the power consumption of Fast Cooling mode vs. WindFree™ Cooling mode.

Easy Installation and Servicing

The WindFree™ wall-mounted air conditioner features a snap-fit bottom cover that can be easily opened and closed. There are two screw points which allows for convenient installation and servicing. Unlike conventional brackets that can be fitted on two fixed hooks, the unit uses a roller type bracket that simplifies the installation process. This makes it easy to mount by installing the bracket on the wall and sliding it effortlessly into the exact position you want.

Two screw points

No special tool needed

Samsung's roller type bracket makes mounting the unit much easier. Simply hang it on the unit and find the best place to install it by sliding the bracket from side to side.

Assembled parts (6)/
Screw points (5)

Installation time[1]:
9.3 min

45% ⬇ →

Assembled parts (3)/
Screw points (2)

Installation time[1]:
5.1 min

[1] Tested on the AM022TNVDKHEU model compared with the Samsung conventional AM022JNVDKHEU model under specific conditions and may vary on specific factors

SmartThings

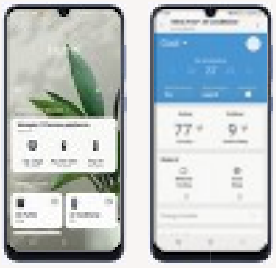

Air conditioner control

Smart Control

Control the temperature in any room, anytime and anywhere. Temperatures can be managed remotely using the SmartThings App[1]. With just a simple touch you can turn it on and off, select the cooling mode, schedule its operation and group devices. With the optional Wi-Fi Kit, the different aspects of the system with up to 16 connectible indoor units can be controlled via smartphone.

[1] A Wi-Fi connection and Samsung SmartThings application account are required. Wi-Fi Kit to be ordered separately. Requires iOS 10.0 or later & Android 5.0 or later. Additional requirements may be needed to apply SmartThings for medium-sized to large commercial buildings. For details contact a Samsung representative.

Not all features are available for all models.

Innovations in detail

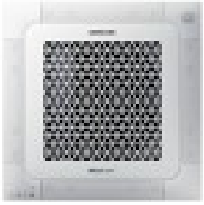

WindFree™ 4-Way Cassette

WindFree™ Technology

The WindFree™ 4-Way Cassette directs air through 15,700 micro-holes in the panel, while the WindFree™ 4-Way 600 x 600 Cassette directs air through 9,000 micro-holes in the panel. These micro-holes are essential for creating a type of airflow called "Still Air"[1] which cools the room gradually and noticeably without drafts.

The WindFree™ 4-Way Cassette is now available in FCU.

[1] ASHRAE (American Society of Heating, Refrigeration, and Air-Conditioning Engineers) defines "Still Air" as air currents at speeds below 0.15 m/s which lacks the presence of cold drafts.

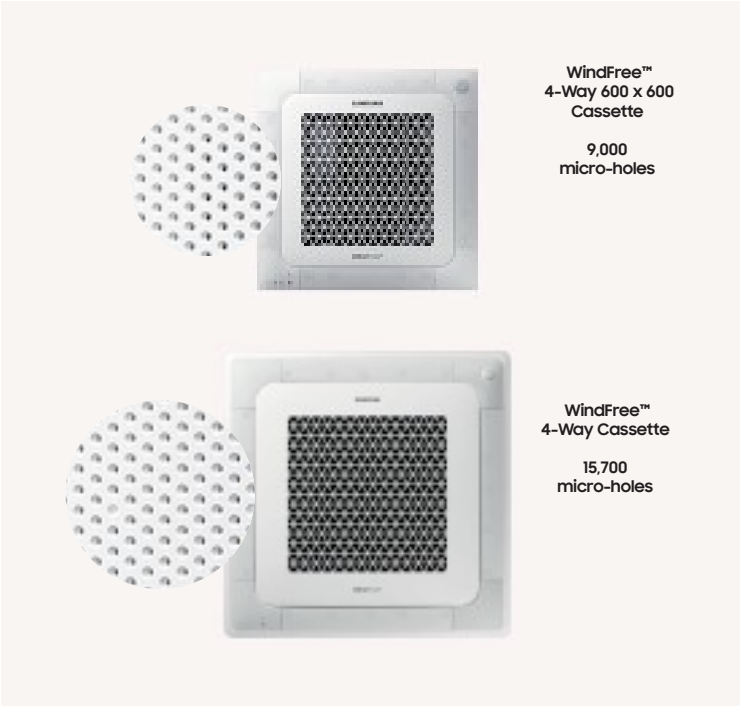

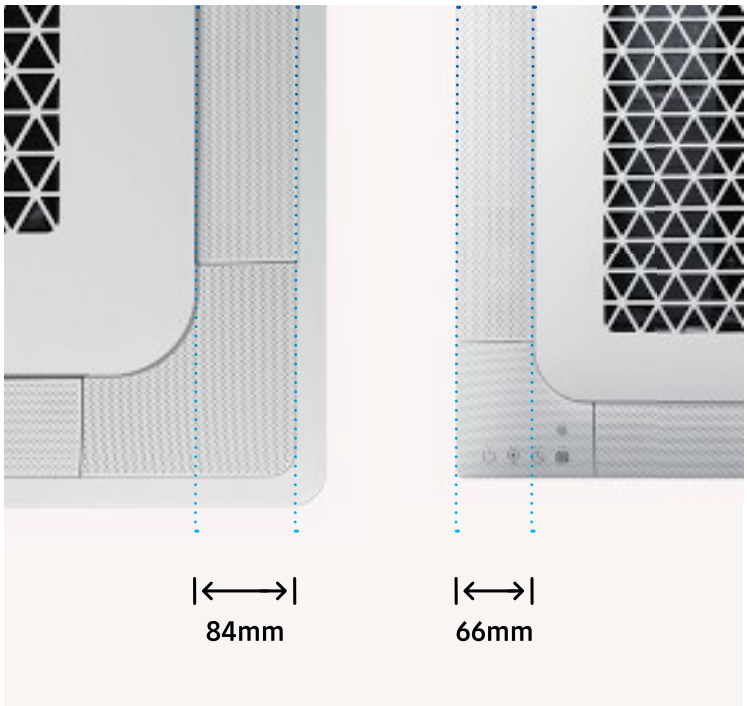

Optimised blades

The larger optimised blades[1] (84 mm WindFree™ 4-Way Cassette, 66 mm WindFree™ 4-Way 600 x 600 Cassette) facilitate a wider cooling range and improved air circulation within the room. This advanced technology also cools the space much faster leaving no zone untouched. These blades are detachable and can be washed easily with water to remove dust or debris that has collected on them, therefore allowing for optimal quality of airflow that in turn helps maintain a cleaner environment.

[1] Samsung testing compares the WindFree™ 4-Way and WindFree™ 4-Way 600 x 600 Cassette to a conventional 4-Way Cassette type air conditioner.

Not all features are available for all models.

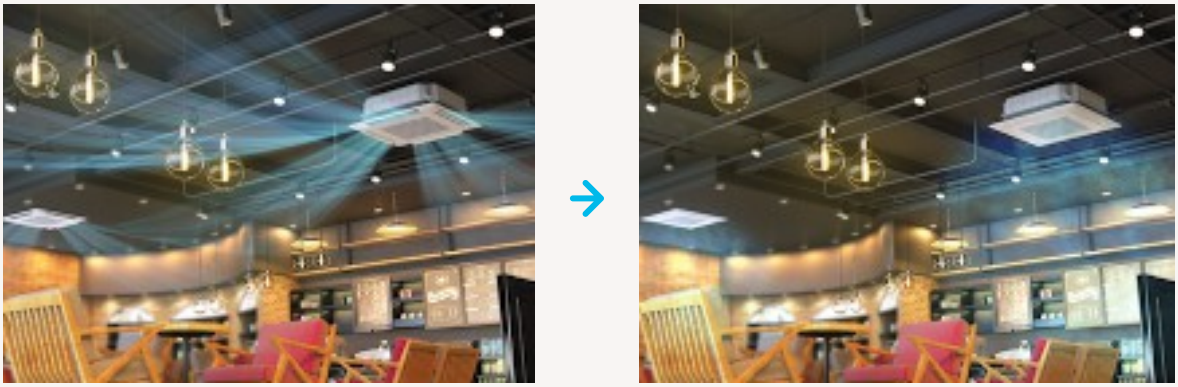

Fast Cooling

If room
reaches comfort zone

WindFree™ Cooling

Smart Comfort Operation

The WindFree™ 4-Way Cassette and the WindFree™ 4-Way 600 x 600 Cassette boosts Smart Comfort Operation. The Fast Cooling process helps to achieve the desired temperature in a room quickly. By simultaneously detecting the humidity levels, the Smart Comfort Operation feature maintains the room's temperature automatically.

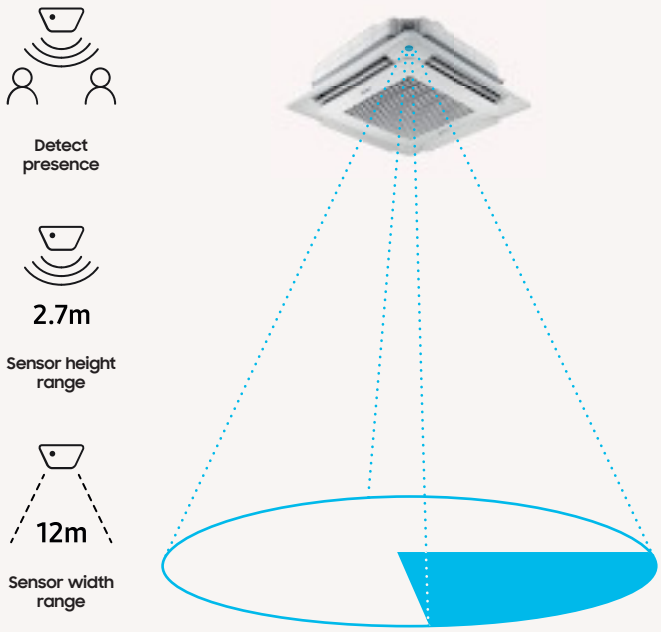

Motion Detect Sensor (optional)

The improved Motion Detect Sensor (MDS) detects the presence and location of people in the room, enabling automatic management of airflow direction and efficient air cooling.

Not all features are available for all models.

Innovations in detail

WindFree™ 4-Way Cassette

Air Purification Panel

The Air Purification Panels in the WindFree™ 4-Way Cassette contain two types of filters to enhance the mitigation of certain Particulate Matter (PM), aimed to keep the indoor air cleaner all day long. The WindFree™ 4-Way Cassette is made of a two filter purification system the Pre-Filter and the PM1.0 Filter. The Pre-Filter captures larger dust particles, stopping them from entering the air conditioning unit.

The PM1.0 Filter[1] not only effectively captures ultrafine dust upto 0.3 µm but also inactivates certain types of bacteria that are captured, using an electrostatic precipitator. It has two main parts that charge and collect certain types of dust and bacteria[1]. The brush discharger generates negative ions. And these give certain dust particles and bacteria[1] a negative charge, so they become strongly attached to the ground electrode due to the electrostatic force of the collector. An added advantage is that this filter is also semi washable, thus saving the purchase and maintenance cost of replacing the filter.

intertek
Total Quality. Assured.

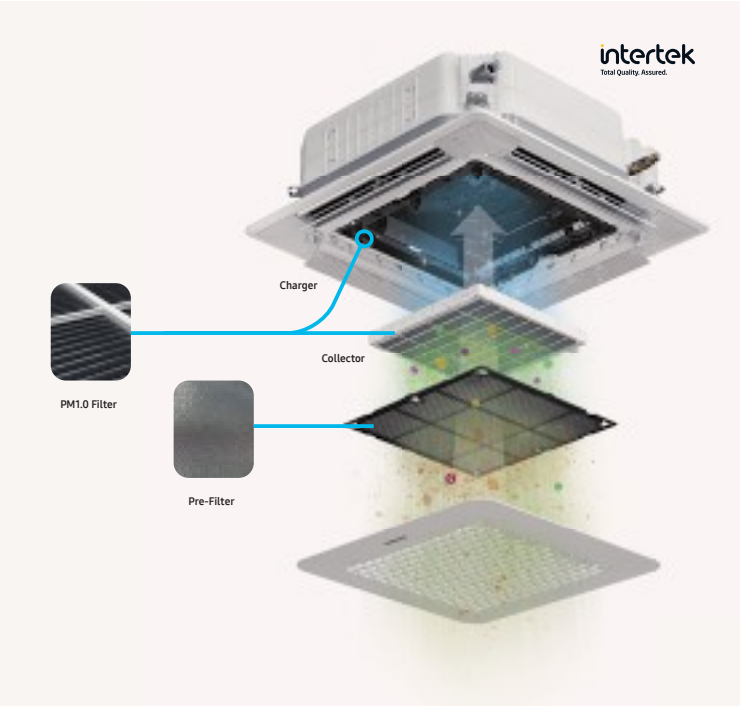

[1] Intertek Report No.: RT20E-S0010-R Date: APR. 17, 2020 (Revised) Based on the data collected the Hypothesis is accepted:The K-element (Electrostatic Precipitator) of Samsung Electronics can sterilize the certain types of bacteria that collected on the filter. (Escherichia coli : above 99 %, Staphylococcus aureus : above 99 %)

Auto Elevation Panel

The cleaning of filters is also an integral part of maintaining good indoor air quality, and elevation panels can make this process easier.

An Auto Elevation Panel is a panel that provides quick and comfortable access to dust filters for cleaning, facilitating extra convenience with the 4 metre[1] elevation advantage with a single remote click. Thus, a ladder is no longer required when cleaning panels. This makes it easier and safer for end users or service engineers to access filters for cleaning.

[1] May vary based on the actual usage conditions.

Not all features are available for all models.

Detachable Washable Parts

The cleanliness of the exterior, as well as the filters, is very important for 4-Way Cassettes that are widely used in commercial spaces. The panels and filters of the WindFree™ 4-Way Cassette are very easy to remove and clean without screws.

One can pull the hook inside the panel grille (near the Samsung logo) to open and remove it. And the corner panels and blades can be easily separated when pulled downwards. All of the exterior parts can be cleaned with a soft brush or cloth. You can also use a vacuum or water to clean the internal filter, so you don't need to keep purchasing new filters.

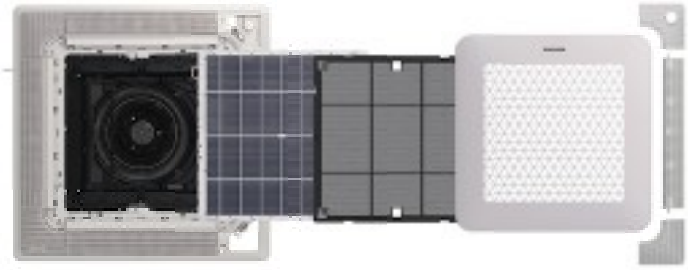

Examples of relevant errors	LED-lamp display			
	On/Off	Defrost	Timer	Filter
Error on indoor temperature sensor		◑		
Error on heat exchanger sensor of the indoor unit	◑	◑		
Error on outdoor unit sensors	◑		◑	
Error on MDS (Motion Detect Sensor)	◑			◑

◑ Blinking

Self-Diagnosis

The WindFree™ 4-Way Cassette's Self-Diagnosis function alerts you to malfunctions straight away. It means that you can quickly arrange a service repair visit. And an error code and LED light enable engineers to easily identify the cause of any failure, helping to reduce the time it takes to diagnose and fix the problem.

Not all features are available for all models.

Innovations in detail

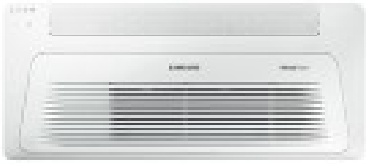

WindFree™ 1-Way Cassette

WindFree™ Technology

The WindFree™ 1-Way Cassette uses WindFree™ Cooling and directs air through tiny holes in the panel, dispersing a gentle flow of air. These 13,000 micro-holes are essential for creating a type of airflow called "Still Air"[1], which cools the room gradually and noticeably without drafts.

[1] ASHRAE (the American Society of Heating, Refrigeration, and Air-Conditioning Engineers) defines "Still Air" as air currents moving at speeds below 0.15 m/s, with no cold drafts.

WindFree™ 1-Way Cassette

13,000 micro-holes

Slim installation

At a height of only 135 mm[1], the WindFree™ 1-Way Cassette is a compact and lightweight device (8–13.5 kg). This slim design makes it not only visually pleasing but also easier to install and maintain, and it can be fitted into small gaps or ceilings.

[1] 135 mm is the height of the unit until the ceiling tile. 145 mm is the height including the ceiling tile. Up to 3.6 kW (DVM) models measures 135 mm (180 mm including panel).

Not all features are available for all models.

Wider cooling range

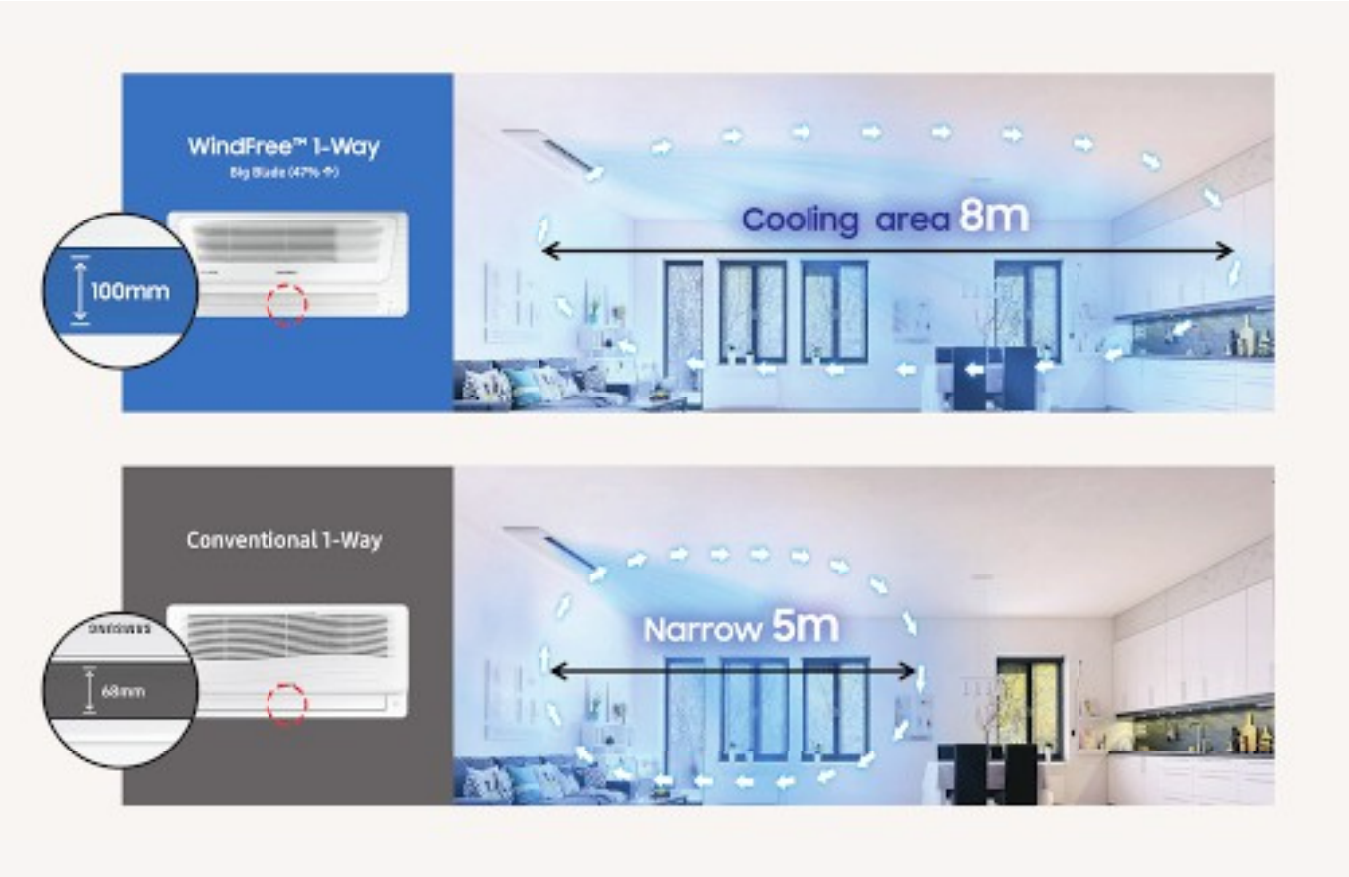

The larger optimised blade is 100 mm[1] and works to cool a larger area much faster. Its sleek design can deliver cool air efficiently, rapidly and evenly over an area of up to 8 m[2] leaving no zone untouched.

[1] Samsung testing compares the WindFree™ 1-Way Cassette to a conventional 1-Way Cassette-type air conditioner.
[2] Based on the 7.1 kW indoor unit.

Not all features are available for all models.

Innovations in detail

WindFree™ 1-Way Cassette

Smart Comfort Operation

The WindFree™ 1-Way Cassette has a humidity sensor as well as a temperature sensor. It continually monitors both the temperature and relative humidity[1] and analyzes the room conditions. It then automatically switches between operating modes to keep everyone feeling really comfortable without the need for any manual control.

[1] The humidity level will only be shown during WindFree™ operation and Dry Mode via the SmartThings app display.

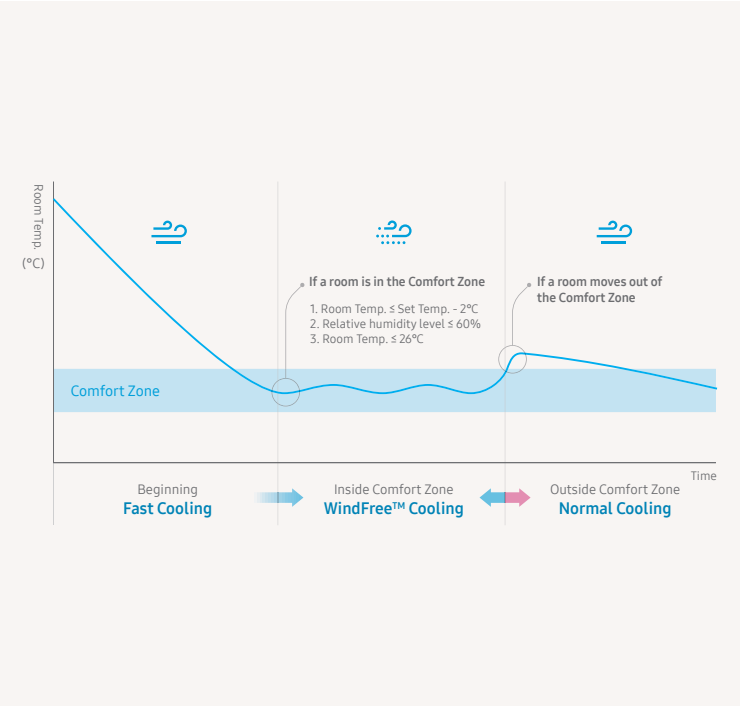

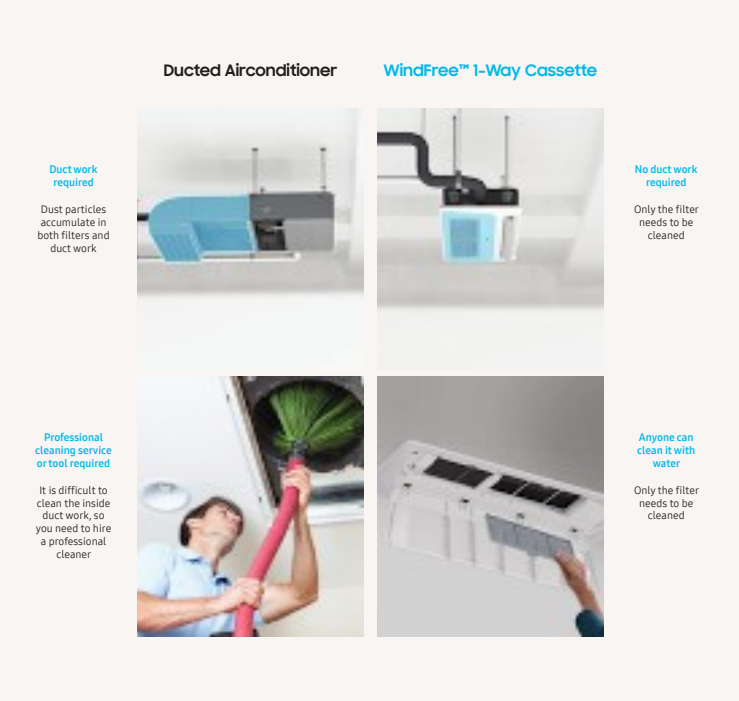

Easy Maintenance

The Samsung WindFree™ 1-Way Cassette requires no duct work. You simply need to regularly clean the built-in filter with water, after removing it from your air conditioner.

Not all features are available for all models.

Air Purification Panel

The Air Purification Panels in the WindFree™ 1-Way Cassette contain three types of filters to enhance the mitigation of certain Particulate Matter, aimed to keep the indoor air cleaner all day long. The WindFree™ 1-Way Cassette is made of a three filter purification system the Pre-Filter, Deodorization Filter[1] and the PM1.0 Filter.

The Pre-Filter captures larger dust particles, stopping them from entering the air conditioning unit. The deodorization filter captures certain unpleasant odours. The PM1.0 Filter not only effectively captures ultrafine dust upto 0.3 µm but also inactivates certain types of bacteria that are captured, using an electrostatic precipitator. It has two main parts that charge and collect certain types of dust and bacteria.[2] The brush discharger generates negative ions. These give the dust particles and certain types of bacteria a negative charge, so they become strongly attached to the ground electrode due to the electrostatic force of the collector. An added advantage is that this filter is also semi washable, thus saving the purchase and maintenance cost of replacing the filter.

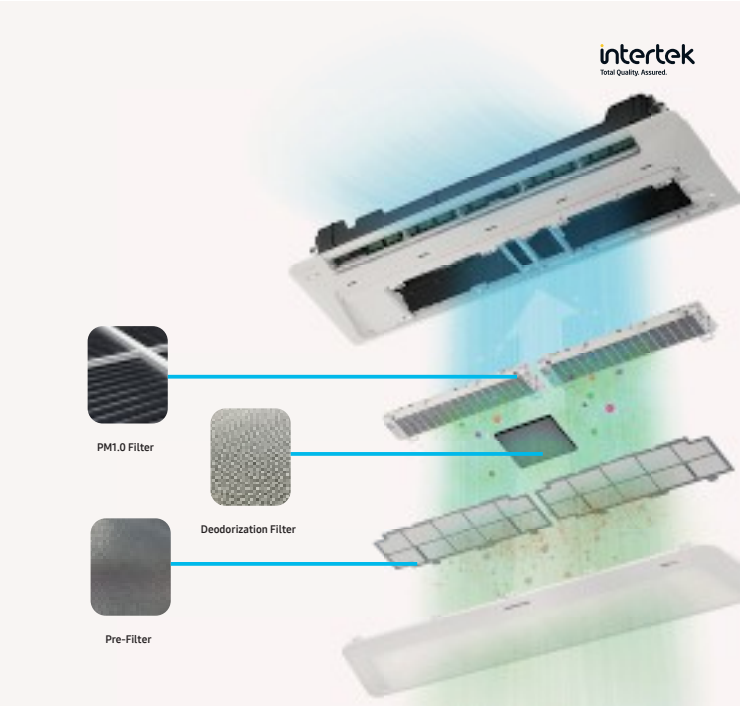

[1] The Deodorization Filter can only be found in WindFree™ 1-Way Cassette.
[2] Intertek Report No.: RT20E-S0010-R
Date: APR. 17, 2020 (Revised) Based on the data collected the Hypothesis is accepted: The K-element (Electrostatic Precipitator) of Samsung Electronics can sterilize the certain types of bacteria that collected on the filter. (Escherichia coli: above 99 %, Staphylococcus aureus: above 99 %)

Not all features are available for all models.

Innovations in detail

360 Cassette

Circular airflow

Unlike traditional 4-Way Cassette units[1], which create areas of uneven airflow[2], the 360 Cassette reaches every single corner of a room or space. Its circular outlet blows cool air in every direction. The bladeless design keeps things comfortably cool without creating a cold draft[3], and without blades blocking the airflow it sends 25 % more air even further[1].

[1] Samsung testing compares the 360 Cassette to a conventional 4-Way Cassette type air conditioner.
[2] The temperature difference is less than 0.6 °C within a 9.3 m radius.
[3] No cold draft between 0–1.5 m in height (with a 14.0 kW indoor unit) within a 5 m radius.

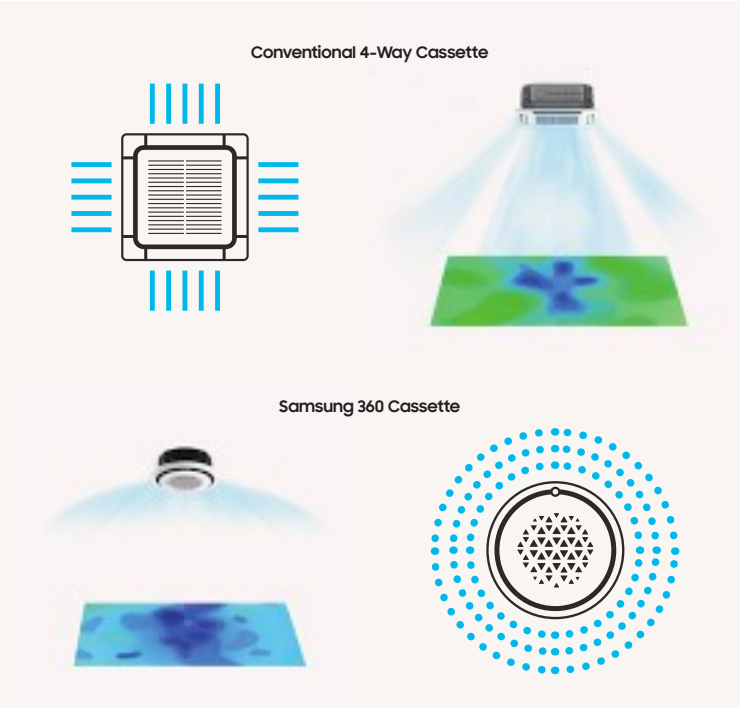

Airflow Control

The air supply is easily adjusted without the use of flaps. Three booster fans work to alter the direction of airflow from within the cassette's hollow space. A rain-like distribution of the air (known as the 'coanda' effect) keeps the room cool and comfortable at all times. The innovative technology overcomes the usual limits of the conventional outlets that use blades, as they obstruct the air at low angles and cause a significant low airflow[1]. The Motion Detector Sensor (MDS) is available for the 360 Cassette.

[1] Based on internal testing compared to a general 4-Way Cassette air conditioner.

Not all features are available for all models.

Circular LED display

The unit features a stylish panel and an intuitive Circular LED display, which allows users to choose or adjust the direction of the airflow with an intuitive wireless (jog shuttle) wireless remote controller. Besides the LED Display also monitors other essential operating information, such as the filter the air flow direction, filter status and any errors. So, with just one glance, you can quickly tell where the air is going and how your 360 Cassette is performing.

Stylish design

The 360 Cassette has an innovative circular design that enables it to match a multitude of interior designs, that adds a touch of style to any room. Its minimalist and elegant styling can help to create a sophisticated and distinctive look in many different sites. With a circular panel, it can fit into a very tiny ceiling space of just 225 mm[1], so it gives you much greater flexibility as it can be installed in a wider choice of locations. The 360 Cassette is available in black or white, in a square or circular design, and can be fitted within the ceiling or exposed on any material.

[1] The minimum installation height of ceiling space may vary depending on the panel design – circular or square type. Square type panels require 30 mm more height in a ceiling space than circular type panel.

Not all features are available for all models.

Innovations in detail

360 Cassette

Air Purification Panel

The Samsung 360 Cassette offers an Purifying Panel that keeps the indoor air fresher and cleaner. It is made of a two filter purification system the pre-filter and the PM1.0 Filter and has a superior filter mesh with 0.5 mm holes, which is 20 % denser than a vinyl chloride type filter.

The Pre-Filter captures larger dust particles, stopping them from entering the air conditioning unit. The PM1.0 Filter is not only effective at capturing ultrafine dust of up to 0.3 µm in size, but it also sterilizes up to 99 % of certain types of bacteria[1] trapped by the filter using an electrostatic precipitator[1].

[1] Verified by Intertek, Report Number RT20E-S0010-R, Issue Date:17 April 2020 . The K-element (Electrostatic Precipitator) of Samsung Electronics can sterilize certain types of bacteria that collected on the filter (Escherichia coli: above 99 %, Staphylococcus aureus: above 99 %).

Auto Elevation Panel

The cleaning of filters is also an integral part of maintaining good indoor air quality, and elevation panels can make this process easier.

An Auto Elevation Panel is a panel that provides quick and comfortable access to dust filters for cleaning, facilitating extra convenience with the 4.5 metre[1] elevation advantage with a single remote click. Thus, a ladder is no longer required when cleaning panels. This makes it easier and safer for end users or service engineers to access filters for cleaning.

[1] May vary based on the actual usage conditions.

Not all features are available for all models.

Innovations in detail

ERV (Plus)

Smart cooling - auto mode

To conserve energy and remain cost-effective, the ERV and ERV Plus (for DVM) both automatically change operation modes depending on the indoor and outdoor temperatures. The ERV Plus (DVM only) is equipped with a direct expansion coil, which brings fresh outside air through the DX coil and into your space. It heats or cools, and can keep rooms at your desired temperature.

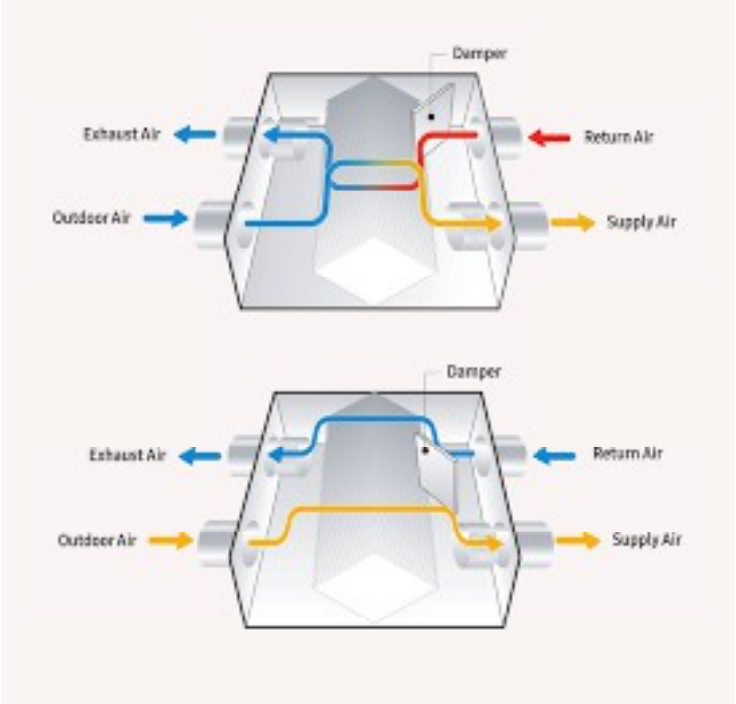

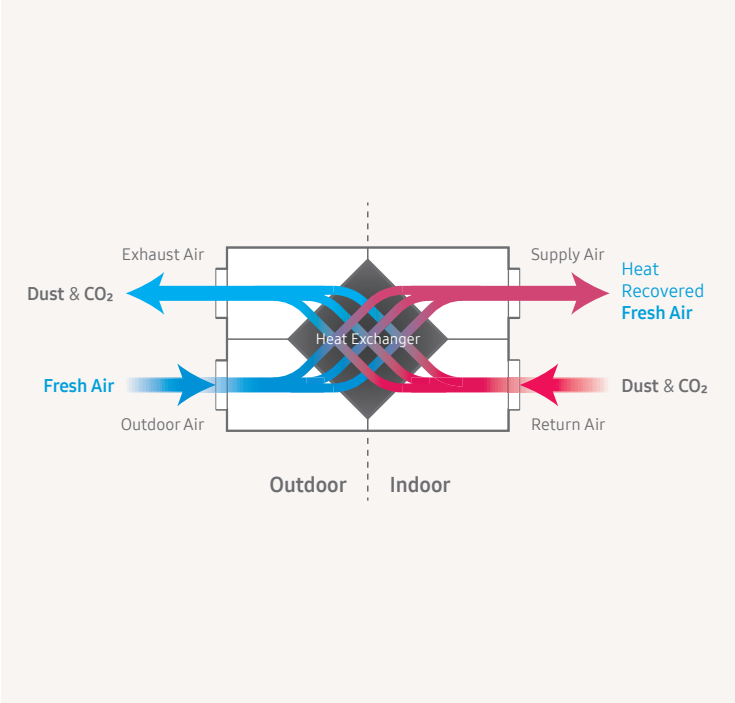

Instantly reduces CO_2 in your room.

The ERV sends fresh air into a room automatically by detecting CO_2 with the CO_2 sensor[1]. Instantly reduces CO_2 in the room. The ERV indoor unit has a CO_2 Sensor[1] that detects the level of CO_2 in the air and instantly draws in more outdoor air to maintain a comfortable environment.

[1] Optional

Air Handling Unit (AHU) Kit

Connect to third-party air handling units

The Samsung AHU kit allows the connection of DVM S outdoor units to third-party air handling units (AHUs)[1]. With this kit you can supply heating or cooling to a DX coil in the AHU. This is a cost-efficient and effective way to provide fresh air to the building at the correct temperature. The unit improves performance and efficiency and is cost-effective.

Features include:

- IP54 waterproof certification (for MXD type AHU kit only)
- Variable capacity
- 2.5 HP–40 HP
- Simple BMS application (0–10 V, MXD-K/X Series)
- Discharge air temperature control and outdoor capacity control

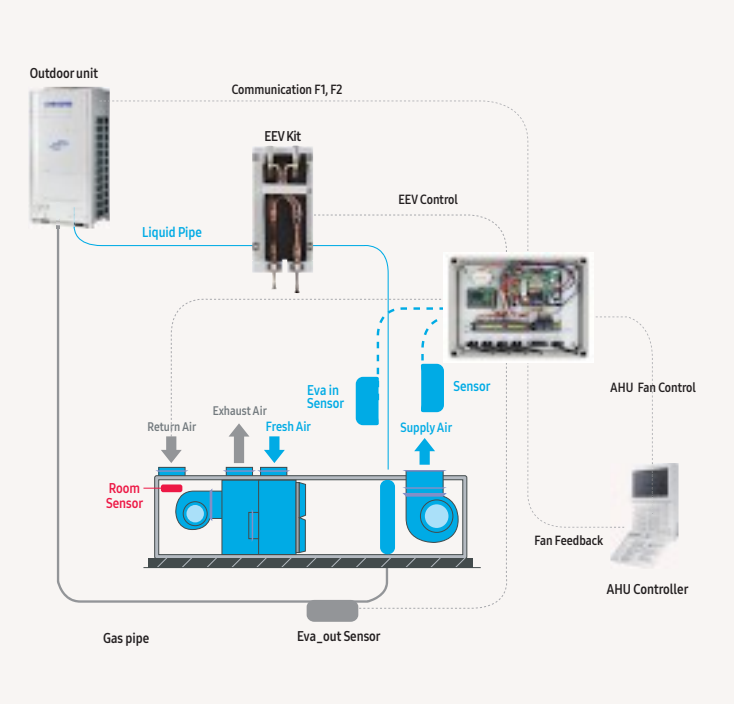

[1] Please contact your local Samsung representative for more information.

Innovations in detail

b.IoT

Samsung b.IoT (building Internet of Things) is a building management solution that can efficiently manage and save energy. It is an open platform with expandability and compatibility options that enable integrated control of the facility's major systems, such as VRF and third-party party devices via BACnet interface.

Samsung b.IoT helps to ensure:

- Efficient installation periods
- Reductions in installation and operation costs
- Optimal energy efficiency
- Efficient management of integrated systems installed in the building

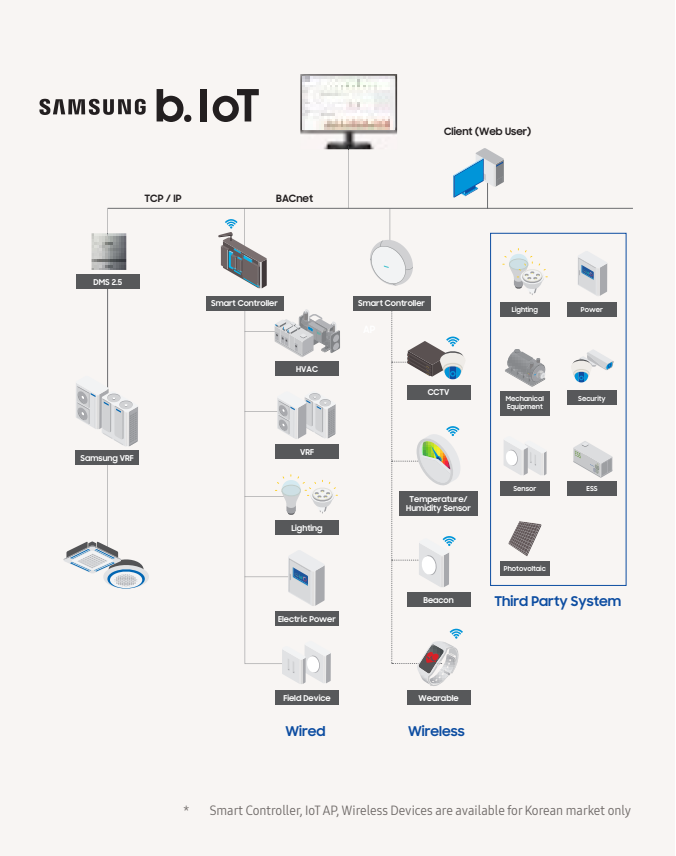

Samsung b.IoT provides:

Open platform

- Supports Open Protocol (BACnet) and API for integration of various devices
- Integrates various sensors and devices wirelessly via IoT gateway

Easy and smart operation

- Optimal operation for Samsung VRF (DVM) products
- Intuitive Graphic UI & convenient rules editor for various solutions
- Trends & alarm lookup

Effective energy usage management

- Energy usage analysis
- Hybrid (HVAC+VRF) energy consumption distribution

Intelligent energy saving algorithms

- Data-Based Comfort Control –
  Comfort based on user-specific algorithms
- Learning-Based Control –
  Optimised control by artificial intelligence (AI)
- Occupancy-Based Control –
  Lighting, humidity & temperature
- Inefficient Operation Detection –
  Time, space & temperature

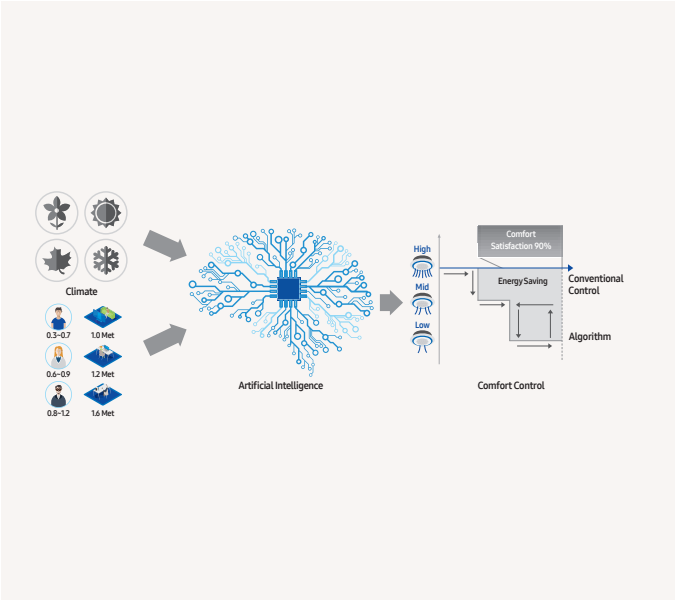

VRF

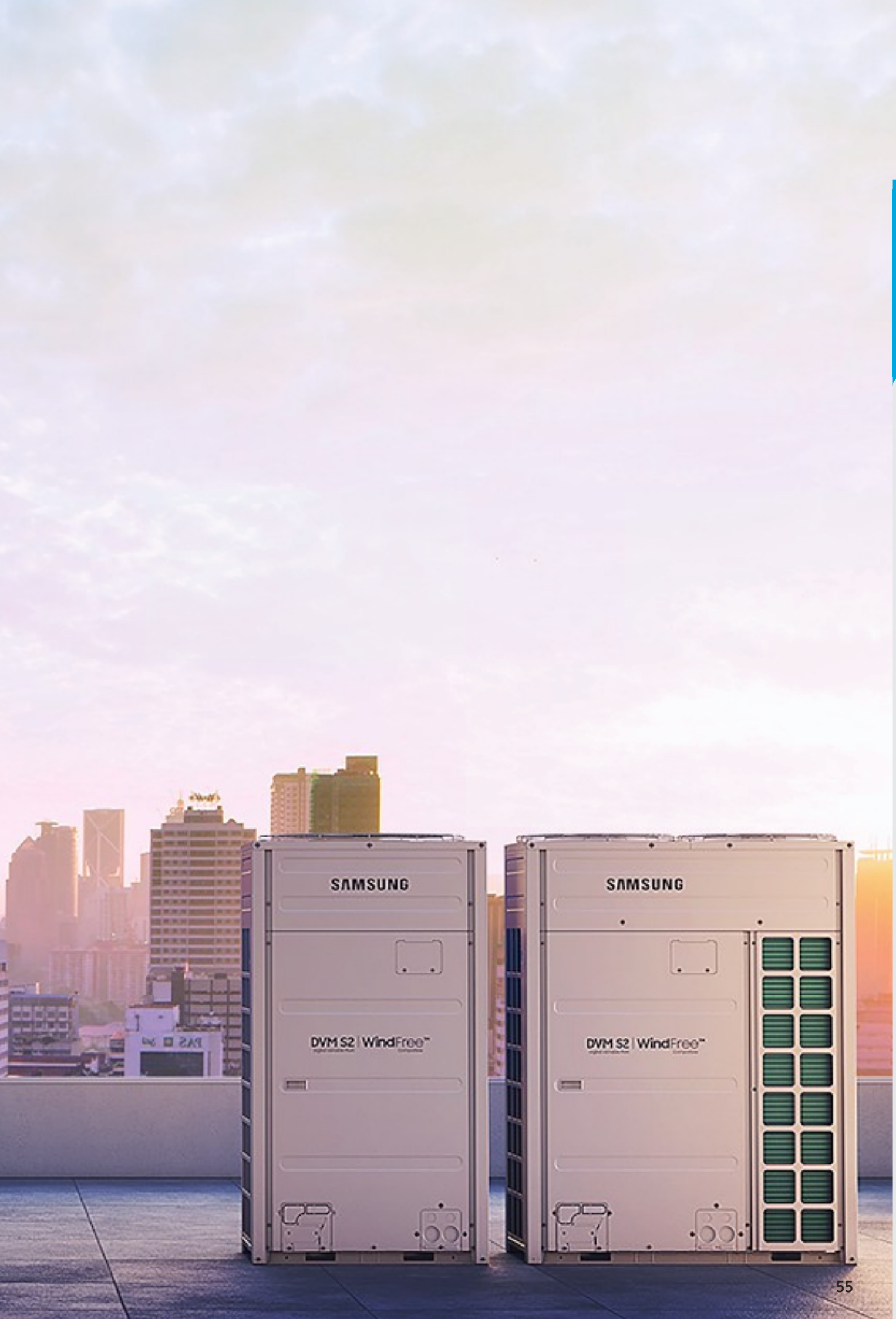
SAMSUNG
DVM S2 | WindFree™
SAMSUNG
DVM S2 | WindFree™

Line-up outdoor

Model		Image	Capacity (HP)													
			4	5	6	8	10	12	14	16	18	20	22	24	26	30
Heat Pump	DVM S Eco Heat Pump	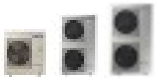	●	●		●	●	●								
	DVM S2 Essential Heat Pump (2-Pipe)						●	●	●	●	●					
	DVM S2 Standard Heat Pump (2-Pipe)					●	●	●	●	●	●	●	●	●	●	
	DVM S2 High Efficiency Heat Pump (2-Pipe)					●	●	●	●	●	●	●	●	●	●	
Heat Recovery	DVM S Eco Heat Recovery (With Heat Recovery Changer Kit)		●	●	●											
	DVM S2 High Efficiency Heat Recovery (3-Pipe)					●	●	●	●	●	●	●	●	●	●	
Water to Air/Water	DVM S Water					●	●	●				●				●

SAMSUNG
DVM S2 WindFree
AMSUNG
S2 WindFree

Line-up indoor

Model	Image	Capacity (kW)									
		1.5	1.7	2.2	2.8	3.6	4.5	5.6	6.0	7.1	8.2
WindFree™ 1-Way Cassette			●	●	●	●		●		●	
WindFree™ 4-Way 600 x 600 Cassette		●		●	●	●	●	●	●		
WindFree™ 4-Way Cassette					●	●	●	●		●	
360 Cassette							●	●		●	
LSP Duct (drain pump excluded)			●	●	●	●	●	●		●	
LSP Duct (drain pump included)			●	●	●	●	●	●		●	
MSP Duct (drain pump included)				●	●	●	●	●		●	
HSP Duct								●		●	
Console				●	●	●	●				
Floor/Ceiling								●		●	
Big Ceiling											
Concealed Floor-Standing						●		●		●	
Packaged Floor-Standing											
Boracay Wall-Mounted (EEV included)		●		●	●	●	●	●		●	
Boracay Wall-Mounted (EEV excluded)		●		●	●	●	●	●		●	
WindFree™ Deluxe (EEV included)		●		●	●	●	●	●		●	●
WindFree™ Deluxe (EEV excluded)		●		●	●	●	●	●		●	●
Max Wall-Mounted											
Hydro Unit HE											
Hydro Unit HT											

NOTE
- Make sure to use an indoor unit that is compatible with DVM S2.
- Indoor units can be connected within the range indicated in the following table.
- If the total capacity of the connected indoor units exceeds the indicated maximum capacity, the cooling and heating capacity of the indoor unit may decrease.
- The total allowable capacity of the connected indoor units can be from 50 % to 130 % of the total outdoor unit capacity. 0.5 × Σ (Outdoor unit capacity) ≤ Total capacity of the connected indoor units ≤ 1.3 × Σ (Outdoor unit capacity).
- EEV kit is necessary for all Indoor Units which do not have EEV kit included, please order EEV Kit separately.

Capacity (kW)										
9.0	11.2	12.8	14.0	16.0	18.0	22.0	25.0	28.0	32.0	50.0
•	•	•	•							
•	•	•	•							
•	•	•	•							
•	•	•	•							
•	•	•	•							
•	•	•	•		•	•		•		
	•		•							
			•					•		
•										
				•					•	•
				•			•			

Selection guide

VRF

		Heat Pump				
		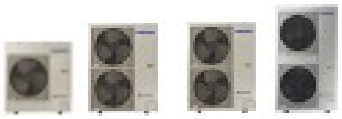				
Model		DVM S Eco		DVM S2 Essential	DVM S2 Standard	DVM S2 High Efficiency
		AM***BXMDEH/EU AM***BXMDGH/EU	AM***BXMWGH/EU	AM***AXVDGH/EU	AM***AXVAGH/EU	AM***AXVGGH/EU
Type	Heat Pump	●	●	●	●	●
	Heat Recovery					
	Capacity range	4–8 HP	8–12 HP	10-40 HP	8-98 HP	8-98 HP
Connectability	WindFree™ Cassette	●	●	●	●	●
	360 Cassette	●	●	●	●	●
	LSP Duct	●	●	●	●	●
	MSP Duct	●	●	●	●	●
	HSP Duct	●	●	●	●	●
	ERV Plus/OAP Duct	●	●	●	●	●
	Wall-Mounted	●	●	●	●	●
	Ceiling/Concealed/Floor-Standing	●	●	●	●	●
	Hydro unit HE/HT	●	●	●	●	●
	MCU Kit					
	AHU Kit	●	●	●	●	●
Features	Refrigerant check mode	●	●	●	●	●
	Simultaneous cooling and heating					
	7-Segment display	●	●	●	●	●
	Four-way direction piping connection	●	●			
	Advanced Flash Injection™			●	●	●
	Cooling @ 50°C			●	●	●
	Heating @ -25 °C[2]		●	●	●	●
	Max. External Static Pressure 110Pa[2]			●	●	●
	Improved fan diffuser			●	●	●
	Reduced air flow noise			●	●	●
	Leak detection (pump down function)			●	●	●
	Night silent mode	●	●	●	●	●
	Variable Refrigerant Temperature	●	●	●	●	●
	Inverter scroll compressor		●	●	●	●
	Twin BLDC rotary compressor	●				
	DC fan motor	●	●	●	●	●
	Multi-serration Fan[2]			●	●	●
	Active AI Pressure Control			●	●	●
	Active AI Defrost			●	●	●
	Active AI Refrigerant Analysis			●	●	●
	On-device Inverter Checker™			●	●	●
	Durafin™ Ultra Heat Exchanger Fin			●	●	●
	Slimmer Liquid Line[3]			●	●	●
	Refrigerant type	R410A	R410A	R410A	R410A	R410A
Smart Protection Technology	Adaptive Sine Wave	●	●	●	●	●
	Refrigerant cooled PCB			●	●	●
	Resonance Avoidance Technology	●	●	●	●	●

[1] Can be connected as a 2-pipe system.
[2] Model specific.
[3] Optional.

Heat Recovery		
DVM S Eco AM***BXMDER/EU AM***BXMDGR/EU	DVM S2 High Efficiency AM***AXVGGR/EU	DVM S Water AM***MXWANR/EU AM***KXWANR/EU
●[1]		●[1]
●	●	●
4–6 HP	8-98 HP	8–90 HP
●	●	●
●	●	●
●	●	●
●	●	●
●	●	●
●	●	●
●	●	●
●	●	●
●	●	●
●	●	●
●	●	●
●	●	●
●	●	●
●		●
	●	
●	●	
●	●	
	●	
	●	
	●	
	●	
●	●	
●	●	●
	●	●
●		
●	●	
	●	
	●	
	●	
	●	
	●	
	●	
●	●	●
R410A	R410A	R410A
●	●	
	●	●
●	●	●

Selection guide

VRF

		Cassette		
			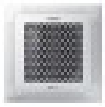	
Model		**WindFree™ 1-Way Cassette**	**WindFree™ 4-Way Cassette**	**360 Cassette**
Airflow	WindFree™ Cooling	●	●	
	360 Degree Air Supply			●
Air Purification	Air Filter	●	●	●
Functions	Compatible with Samsung SmartThings	●	●	●
	Compatible with Wi-Fi Kit	●	●	●
	Humidity Sensor	●	●	●
	MDS (Motion Detect Sensor)		Optional	Optional
	Automatic ESP Setting			
	Quiet Mode	●	●	
Controls	Wireless remote controller included			
Others	EEV included	●	●	●
	Built-In Drain Pump	●	●	●

		Others				
Model		**Console**	**Floor/Ceiling**	**Big Ceiling**	**Concealed Floor-Standing**	**Packaged Floor-Standing**
Airflow	WindFree™ Cooling					
	360 Degree Air Supply					
Air Purification	Air Filter	●	●	●	●	●
Functions	Compatible with Samsung SmartThings	●	●	●	●	●
	Compatible with Wi-Fi Kit	●	●	●	●	●
	Humidity Sensor					
	MDS (Motion Detect Sensor)					
	Automatic ESP Setting					
	Quiet Mode				●	
Controls	Wireless remote controller included	●				
Others	EEV included	●		●	●	●
	Built-In Drain Pump					

LSP Duct	MSP Duct	HSP Duct
●	●	●
●	●	●
●	●	●
	●	Model-specific
●	●	●
Model-specific	●	Model-specific

Others

Hydro Unit HE	Hydro Unit HT
●	●

Wall-Mounted

Boracay Wall-Mounted	WindFree™ Deluxe	Max Wall-Mounted
	●	
●	●	●
●	●	●
●	●	●
	●	
Model-specific	Model-specific[1]	●

[1] EEV kit is necessary for all Indoor Units which do not have EEV kit included, please order EEV Kit separately.

Exit →

Nomenclature

Indoor units

AM	045	A	N	4	P	K	H
1	2	3	4	5	6	7	8

1	Classification	AM	VRF (DVM)
		AN	Ventilation (ERV)
2	Capacity		x1/10 kW (3 digits)
3	Version	F	2013
		H	2014
		J	2015
		K	2016
		M	2017
		N	2018
		R	2019
		T	2020
		A	2021
4	Product Type	N	Indoor Unit (NASA)
		S	ERV
5	Product Notation	1	WindFree™ 1-Way Cassette
		4	360 Cassette & WindFree™ 4-Way Cassette
		N	WindFree™ 4-Way 600 x 600 Cassette
		L	Low Static Pressure Duct (Slim Duct)
		M	Medium Static Pressure Duct
		H	High Static Pressure Duct
		E	Outdoor Air Processing Duct
		C	Ceiling
		J	Console
		F	Floor-Standing
		P	Packaged Floor-Standing
		T	Boracay Wall-Mounted (EEV excluded)
		Q	Boracay, Max Wall-Mounted (EEV included)
		A	AR5000 Wall-Mounted (EEV excluded)
		V	AR5000 Wall-Mounted (EEV included)
		B	Hydro Unit
		K	ERV (Plus)
		W	DVM S Water
6	Feature	F	Flagship
		P	Premium
		D	Deluxe
		S	Standard
7	Voltage Rating	E	1Φ, 220~240 V, 50 Hz
		K	1Φ, 220~240 V, 50/60 Hz
		G	3Φ, 220~240 V, 50 Hz
8	Mode	H	Heat Pump (R410A)
		B	Heat Pump (R134A)
		N	ERV

Outdoor units

AM	080	B	X	M	D	G	H
1	2	3	4	5	6	7	8

1	Classification	AM	VRF (DVM)
2	Capacity	x 1/10 HP (3 digits)	
3	Version	K	2016
		M	2017
		N	2018
		R	2019
		T	2020
		A	2021
		B	2022
4	Product Type	X	Outdoor Unit
5	Product Notation	V	DVM S Essential/Standard/High Efficiency
		W	DVM S Water
		M	DVM S Eco
6	Feature	A	Standard + General Temperature + Module
		H	High EER + Low Temperature + Module
		G	High EER + General Temperature + Module
		D,W	Standard + General Temperature + Non-Module
7	Voltage Rating	E	1Φ, 220~240 V, 50 Hz
		G	3Φ, 380~415 V, 50 Hz
		N	3Φ, 380~415 V, 50/60 Hz
8	Mode	H	Heat Pump
		R	Heat Recovery

Specifications

VRF

DVM S Eco Heat Pump

- Horizontal discharge and rear suction by means of one (4~5 HP) or two (8~14 HP) propeller BLDC Inverter fan(s).
- Each module houses one compressor: Twin BLDC Rotatory (4~8 HP) or Inverter Scroll with Flash Injection technology (10~14 HP).
- Compressor micro frequency control with 0.01 Hz step.
- Night Silent Mode available.
- Eurovent certified and ErP (Ecodesign) compliant.
- Four-way direction piping connection.

Model				AM040BXMDEH/EU	AM050BXMDEH/EU	AM080BXMDGH/EU
Power Supply			Φ, #, V, Hz	1Φ, 2, 220~240 V, 50 Hz	1Φ, 2, 220~240 V, 50 Hz	3Φ, 4, 380~415 V, 50 Hz
Performance	HP		HP	4	5	8
	Capacity	Cooling	kW	12.1	14	22.4
		Heating	kW	12.1	14	22.4
	Maximum number of connectable indoor units		EA	6	8	13
	Total capacity of the connected indoor units	Min.	kW	5.6	7	11.2
		Max.	kW	15.7	18.2	29.1
Power	Power Input	Cooling	kW	3.9	5.19	10.98
		Heating	kW	3.23	4.12	6.4
	Current Input	Cooling	A	17.8	23.8	17.2
		Heating	A	14.8	18.9	10
	Current	Minimum SSC value	MVA	-	-	3.4
		MCA	A	24	27	18.4
		MFA	A	32	40	25
Energy Efficiency[1]	EER (Nominal Cooling)		W/W	3.1	2.7	2.04
	COP (Nominal Heating)		W/W	3.75	3.4	3.5
	SEER (Cassette)		W/W	7.6	7.35	6
	SCOP (Cassette)		W/W	4.2	4.4	4.25
Compressor	Type		-	Twin BLDC Rotary	Twin BLDC Rotary	Twin BLDC Rotary
	Output		kW × n	4.04 x 1	4.04 x 1	4.78 x 1
	Oil	Type	-	PVE	PVE	PVE
		Initial Charge	cc	1,700	1,700	1,700
Fan	Type & Discharge direction		-	Propeller	Propeller	Propeller
			-	Horizontal	Horizontal	Horizontal
	Number of Fans		EA	1	1	2
	Airflow Rate		m^3/min	64	70	135
	External Static Pressure	Max.	mmAq	3	3	3
			Pa	29.4	29.4	29.4
Fan Motor	Model		-	BLDC Motor	BLDC Motor	BLDC Motor
	Output x n		W	125 x 1	139 x 1	139 x 2
Piping Connections	Liquid Pipe		ø, mm	9.52	9.52	9.52
			ø, inch	3/8	3/8	3/8
	Gas Pipe		ø, mm	15.88	15.88	19.05
			ø, inch	5/8	5/8	3/4
	Piping length (ODU-IDU)[3]	Max. (Equiv.)	m	50 (65)	50 (65)	100 (130)
	Piping length (1st Branch - IDU)[3]	Max.	m	40	40	40
	Total piping length (System)	Max.	m	150	150	300
	Level Difference (Outdoor in highest position)	Max.	m	30	30	30
	Level Difference (Indoor in highest position)	Max.	m	25	25	30
	Level Difference (IDU-IDU)[3]	Max.	m	15	15	30
Wiring Connections	Communication	Min.	mm^2	0.75	0.75	0.75
		Remark	-	F1, F2	F1, F2	F1, F2
Refrigerant	Type			R410A(Fluorinated greenhouse gas, GWP=2,088)		
	Factory Charging		kg / tCO_2e	2.00/4.18	2.50/5.22	3.70/7.73
Sound[2]	Sound Pressure	Cooling	dB(A)	53	56	58
		Heating	dB(A)	56	58	59
	Sound Power		dB(A)	70	73	73
External Dimensions	Net Weight		kg	79	84	115
	Net Dimensions (W x H x D)		mm	940 x 998 x 330	940 x 998 x 330	940 x 1,420 x 330
Operating Temperature Range	Cooling		°C	-5.0~48.0	-5.0~48.0	-5.0~48.0
	Heating		°C	-20.0~24.0	-20.0~24.0	-20.0~24.0

AM080BXMWGH/EU	AM100BXMWGH/EU	AM120BXMWGH/EU
3Φ, 4, 380~415 V, 50 Hz	3Φ, 4, 380~415 V, 50 Hz	3Φ, 4, 380~415 V, 50 Hz
8	10	12
22.4	28	33.6
22.4	28	33.6
13	18	21
11.2	14	16.8
29.1	36.4	43.6
9.96	12.73	14.3
5.89	7.78	9.21
15.6	20	22.4
9.2	12.2	14.4
3.4	4.6	5.1
18	21.5	23.5
25	30	30
2.25	2.2	2.35
3.8	3.6	3.65
6.3	6.4	6.5
4.25	4.15	4.5
Scroll Inverter	Scroll Inverter	Scroll Inverter
5.18 x 1	6.39 x 1	6.39 x 1
PVE	PVE	PVE
1,100	1,100	1,100
Propeller	Propeller	Propeller
Horizontal	Horizontal	Horizontal
2	2	2
135	165	166
3	3	3
29.4	29.4	29.4
BLDC Motor	BLDC Motor	BLDC Motor
139 x 2	244 x 2	244 x 2
9.52	9.52	12.70
3/8	3/8	1/2
19.05	22.22	28.58
3/4	7/8	1 1/8
100 (130)	160 (185)	160 (185)
40	40	40
300	300	300
50	50	50
40	40	40
50	50	50
0.75	0.75	0.75
F1, F2	F1, F2	F1, F2
R410A(Fluorinated greenhouse gas, GWP=2,088)		
3.70/7.73	4.30/8.98	4.80/10.02
58	58	60
59	64	64
73	74	76
135	155	162
940 x 1,420 x 330	940 x 1,630 x 460	940 x 1,630 x 460
-5.0~48.0	-5.0~52.0	-5.0~52.0
-20.0~24.0	-25.0~24.0	-25.0~24.0

[1]Performances are based on the following test conditions:
- Cooling: Indoor temperature: 27 °C DB, 19 °C WB, Outdoor temperature: 35 °C DB, 24 °C WB
- Heating: Indoor temperature: 20 °C DB, 15 °C WB, Outdoor temperature: 7 °C DB, 6 °C WB
- Equivalent refrigerant piping: 7.5 m, Level differences: 0 m

[2]Sound pressure level is obtained in an anechoic room. Sound pressure level is a relative value, depending on the distance and acoustic environment. Sound pressure level may differ according to operating conditions. Sound power level is an absolute value that a sound source generates.
Sound Power: ODU and IDU operation mode is "Cooling" and hydro unit is "Heating".

[3]ODU: Outdoor Unit, IDU: Indoor Unit

EUROVENT CERTIFIED PERFORMANCE
www.eurovent-certification.com

Dimensional drawings

DVM S Eco Heat Pump

AM040BXMDEH/EU, AM050BXMDEH/EU

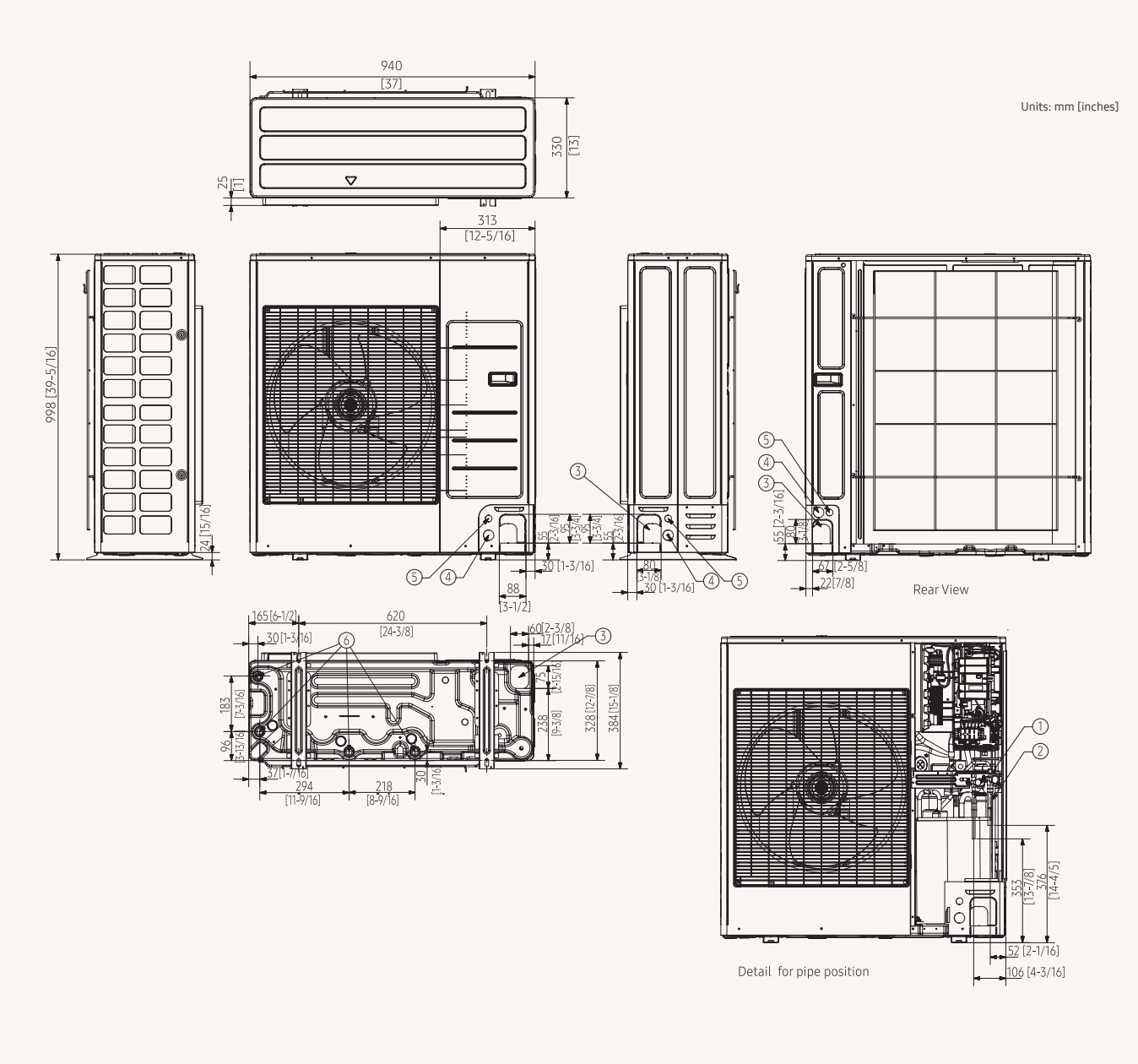

NO	Name	Description
		4/5 hp
1	Refrigerant liquid pipe	ø9.52 (ø3/8)
2	Refrigerant gas pipe	ø15.88 (ø5/8)
3	Knock-out hole for pipe intake	Front/Side/Rear/Bottom
4	Power wiring conduits	Front/Side/Rear, ø34.00 (ø1 3/8)
5	Communication wiring conduits	Front/Side/Rear, ø22.00 (ø7/8)
6	Drain holes	Connect with the provided drain plug.

AM080BXMDGH/EU, AM080BXMWGH/EU

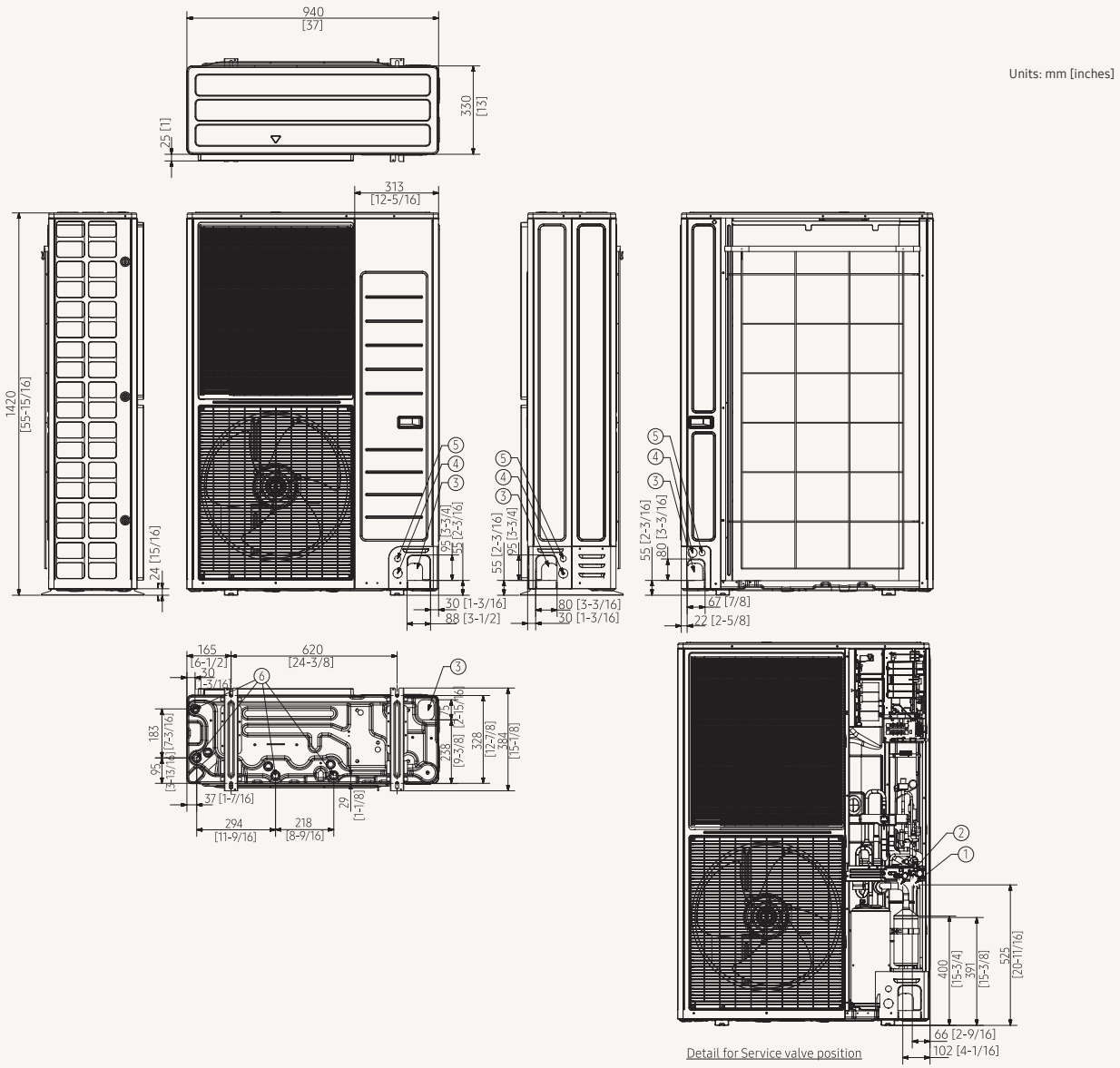

NO	Name	Description
		8 hp
1	Refrigerant gas pipe	ø19.05 (ø3/4)
2	Refrigerant liquid pipe	ø9.52 (ø3/8)
3	Knock-out hole for pipe intake	Front/Side/Rear/Bottom
4	Power wiring conduits	Front/Side/Rear, ø34.00 (ø1 3/8)
5	Communication wiring conduits	Front/Side/Rear, ø22.00 (ø7/8)
6	Drain holes	Connect with the provided drain plug.

Dimensional drawings

DVM S Eco Heat Pump

AM100BXMWGH/EU, AM120BXMWGH/EU

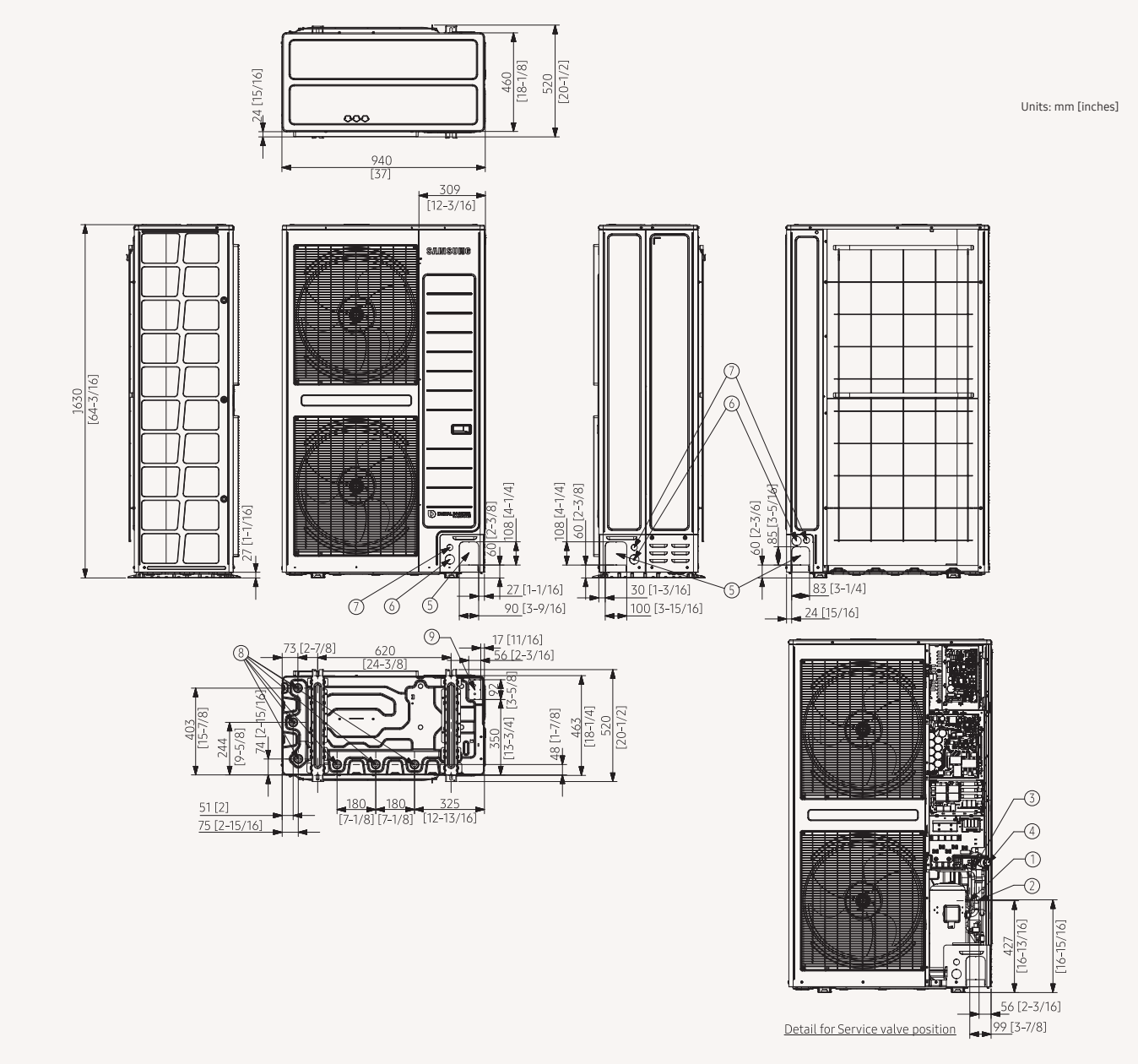

NO	Name	Description	
		10 hp	12 hp
1	Refrigerant liquid pipe	ø9.52 (ø3/8)	ø12.70 (ø1/2)
2	Refrigerant gas pipe	ø22.28 (ø5/8)	ø28.58 (ø3/4)
3	Service valve (gas)		
4	Service valve (liquid)		
5	Knock-out hole for pipe intake	Front/Side/Rear	
6	Power wiring conduits	Front/Side/Rear, ø44 (ø1 3/4)	
7	Communication wiring conduits	Front/Side/Rear, ø28 (ø1 1/8)	
8	Drain holes	Connect with the provided drain plug.	
9	Knock-out hole for pipe intake	Bottom	

Specifications

VRF

DVM S2 Essential Heat Pump (2-Pipe)

- Erp (Ecodesign) compliant and Eurovent certified.
- Advanced Flash Injection™ technology.
- Active AI Pressure Control.
- Active AI Defrost.
- Active AI Refrigerant analysis.
- Durafin™ Ultra Heat Exchanger Fin.
- Optional Slimmer Liquid Pipe.
- On-device Inverter Checker™.

Model				AM100AXVDGH/EU	AM120AXVDGH/EU	AM140AXVDGH/EU
Power Supply			Φ, #, V, Hz	3Φ, 4, 380~415 V, 50 Hz	3Φ, 4, 380~415 V, 50 Hz	3Φ, 4, 380~415 V, 50 Hz
Performance	HP		HP	10	12	14
	Capacity	Cooling (Rated)	kW	28.0	33.6	40.0
		Heating (Rated)	kW	28.0	33.6	40.0
		Heating (Max)	kW	31.5	37.8	45.0
	Maximum number of connectable indoor units		ea	18	21	26
	Total capacity of the connected indoor units	Min.	kW	14.0	16.8	20.0
		Max.	kW	36.4	43.7	52.0
Power	Current Input	Cooling (Rated)	A	20.50	22.01	28.60
		Heating (Rated)	A	14.34	16.45	20.91
	Current	Minimum SSC value	MVA	3.7	4.0	4.6
		MCA	A	23.0	25.0	29.0
		MFA	A	32	32	32
Energy efficiency[1]	SEER		W/W	6.00	6.40	6.20
	SCOP		W/W	4.10	4.30	4.10
	ηs.c		%	237	253	245
	ηs.h		%	161	169	161
Compressor	Type		-	Inverter Scroll x 1	Inverter Scroll x 1	Inverter Scroll x 1
	Output		kW x n	6.67 x 1	6.67 x 1	6.67 x 1
	Oil	Type	-	PVE	PVE	PVE
		Initial Charge	cc x n	1,100 x 1	1,100 x 1	1,100 x 1
Fan	Type		-	Propeller	Propeller	Propeller
	Discharge direction		-	Vertical	Vertical	Vertical
	Number of Fans		ea	1	1	1
	Airflow Rate		m^3/min	167	196	210
			l/s	2,779	3,260	3,500
	External Static Pressure	Max.	mmAq	11	11	8
			Pa	110	110	80
Fan Motor	Type		-	BLDC Motor	BLDC Motor	BLDC Motor
	Output		W x n	630 x 1	630 x 1	630 x 1
Piping Connections	Liquid Pipe		ø, mm	9.52	12.70	12.70
			ø, inch	3/8	1/2	1/2
	Gas Pipe		ø, mm	22.22	28.58	28.58
			ø, inch	7/8	11/8	11/8
	Piping length (ODU-IDU)[1]	Max. (Equiv.)	m	200 [220]	200 [220]	200 [220]
	Piping length (1st Branch - IDU)[3]	Max.	m	90	90	90
	Total piping length (System)	Max.	m	1,000	1,000	1,000
	Level difference (ODU in highest position)[1]	Max.	m	110	110	110
	Level difference (IDU in highest position)[1]	Max.	m	110	110	110
	Level Difference (IDU-IDU)3	Max.	m	50	50	50
Wiring Connections	Transmission Cable	Min.	mm^2	0.75	0.75	0.75
		Remark	-	F1, F2	F1, F2	F1, F2
Refrigerant	Type		-	R410A (Fluorinated greenhouse gas, GWP=2,088)		
	Factory Charging		kg	5.5	7.0	7.0
			tCO_2e	11.48	14.62	14.62
Sound	Sound Pressure[2]	Cooling	dB(A)	56	61	63
		Heating	dB(A)	60	63	65
	Sound Power	Cooling	dB(A)	78	81	85
External Dimensions	Net Weight		kg	185	205	207
	Net Dimensions (W x H x D)		mm	930 x 1,695 x 765	930 x 1,695 x 765	930 x 1,695 x 765
Operating Temperature Range	Cooling		°C	-5~50	-5~50	-5~50
	Heating		°C	-25~24	-25~24	-25~24

AM160AXVDGH/EU	AM180AXVDGH/EU
3Φ, 4, 380~415 V, 50 Hz	3Φ, 4, 380~415 V, 50 Hz
16	18
45.0	50.4
45.0	50.4
50.4	56.7
29	32
22.5	25.2
58.5	65.5
31.04	37.61
22.38	24.75
5.2	6.3
32.0	39.2
40	50
6.30	5.90
4.20	4.10
249	233
165	161
Inverter Scroll x 1	Inverter Scroll x 1
8.93 x 1	8.93 x 1
PVE	PVE
1,400 x 1	1,400 x 1
Propeller	Propeller
Vertical	Vertical
2	2
303	324
5,052	5,401
11	11
110	110
BLDC Motor	BLDC Motor
620 x 2	620 x 2
12.70	15.88
1/2	5/8
28.58	28.58
1 1/8	1 1/8
200 [220]	200 [220]
90	90
1,000	1,000
110	110
110	110
50	50
0.75	0.75
F1, F2	F1, F2
R410A (Fluorinated greenhouse gas, GWP=2,088)	
8.0	8.0
16.70	16.70
60	61
62	64
81	83
242	242
1,295 x 1,695 x 765	1,295 x 1,695 x 765
-5~50	-5~50
-25~24	-25~24

[1]Performances are based on the following test conditions:
- Cooling: Indoor temperature: 27 °C DB, 19 °C WB, Outdoor temperature: 35 °C DB, 24 °C WB
- Heating: Indoor temperature: 20 °C DB, 15 °C WB, Outdoor temperature: 7 °C DB, 6 °C WB
- Equivalent refrigerant piping: 7.5 m, Level differences: 0 m

[2]Sound pressure level is obtained in an anechoic room. Sound pressure level is a relative value, depending on the distance and acoustic environment. Sound pressure level may differ according to operating conditions. Sound power level is an absolute value that a sound source generates.
Sound Power: ODU and IDU operation mode is "Cooling" and hydro unit is "Heating".

[3]ODU: Outdoor Unit, IDU: Indoor Unit

EUROVENT CERTIFIED PERFORMANCE
www.eurovent-certification.com

Dimensional drawings

DVM S2 Essential Heat Pump (2-Pipe)

AM100/120/140AXVDGH/EU

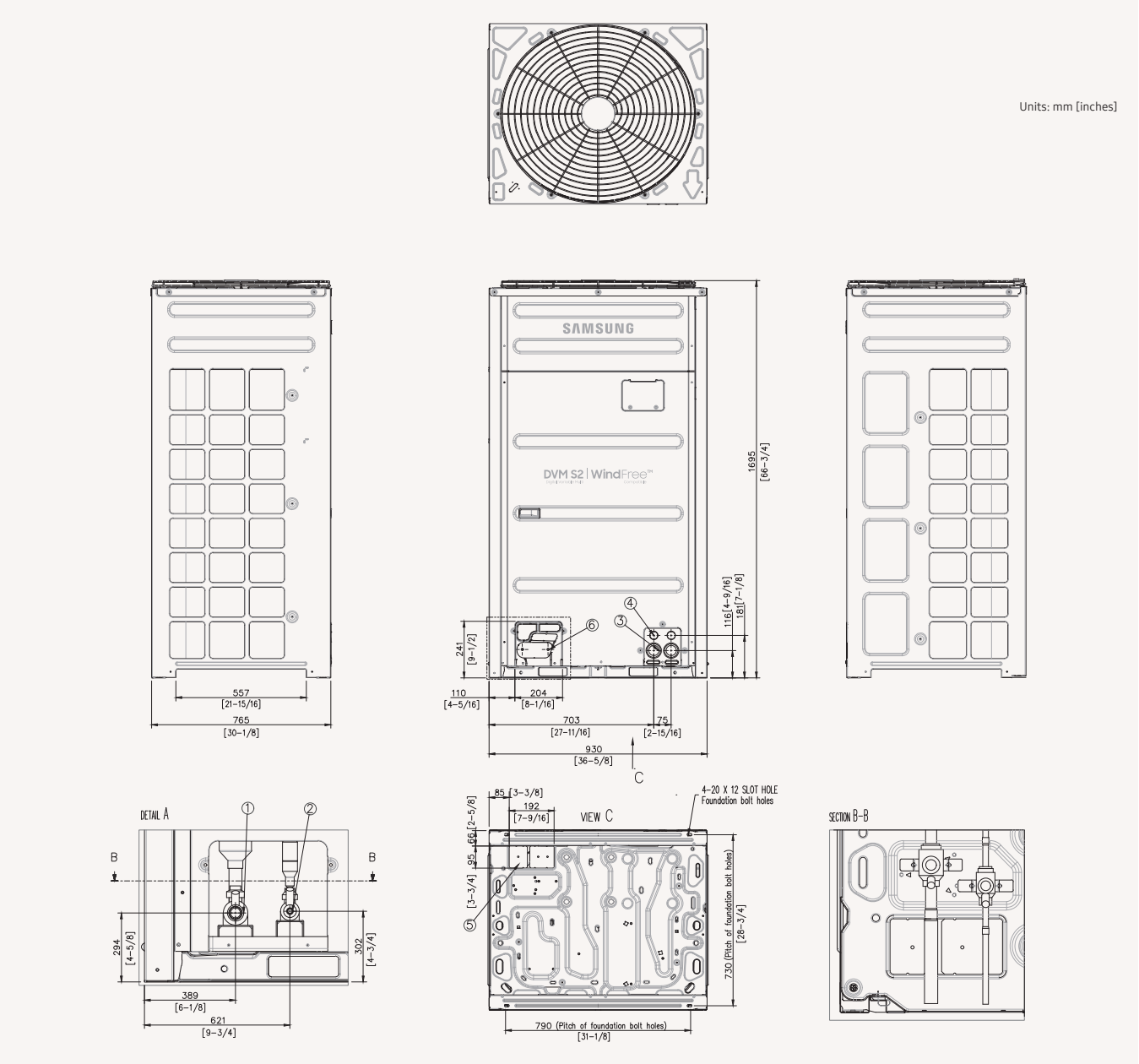

NO	Name	Description
1	Gas Ref.pipe	See NOTE 4.
2	Liquid Ref.pipe	See NOTE 4.
3	Power wiring conduit	Ø44
4	Communication wiring conduit	Ø34
5	Knock-out Hole for Ref.Piping (bottom)	
6	Knock-out Hole for Ref.Piping (front)	

HP	Liquid pipe	Gas pipe
8	9.52(3/8)	19.05(3/4)
10	9.52(3/8)	22.22(7/8)
12	12.70(1/2)	28.58(1-1/8)
14	12.70(1/2)	28.58(1-1/8)
16	12.70(1/2)	28.58(1-1/8)
18	15.88(5/8)	28.58(1-1/8)
20	15.88(5/8)	28.58(1-1/8)
22	15.88(5/8)	28.58(1-1/8)
24	15.88(5/8)	34.92(1-3/8)
26	19.05(3/4)	34.92(1-3/8)

Note:
1. Detail A and SECTION B-B indicate the dimension after fixing the attached piping.
2. Item 3-6: Knock-out hole
3. View C indicate the dimension of knock-out hole (bottom)
4. Pipe [Ø, mm(inch)]: Brazing connection

AM160/180AXVDGH/EU

Units: mm [inches]

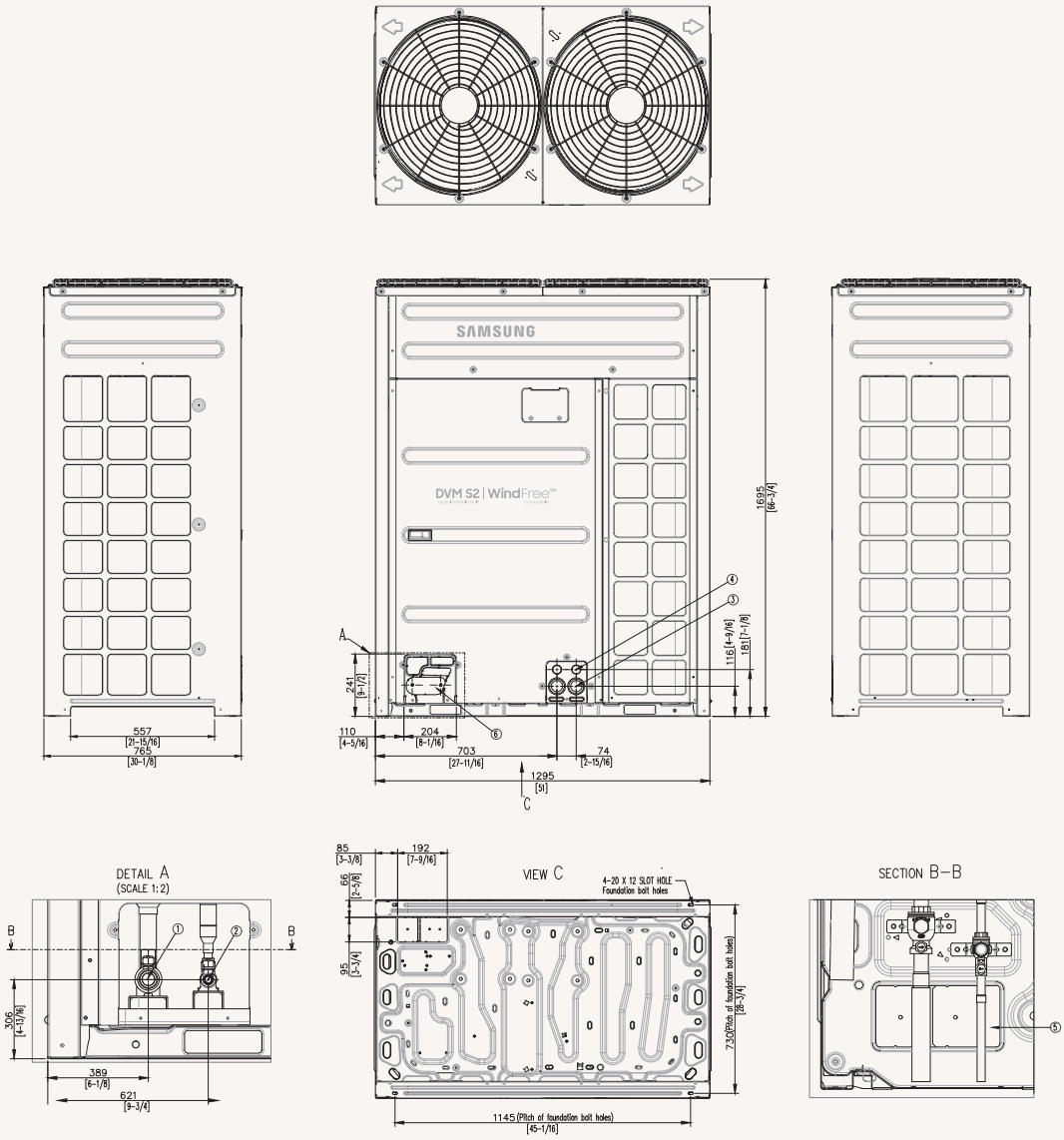

NO	Name	Description
1	Gas Ref.pipe	See NOTE 4.
2	Liquid Ref.pipe	See NOTE 4.
3	Power wiring conduit	Ø44
4	Communication wiring conduit	Ø34
5	Knock-out Hole for Ref.Piping (bottom)	
6	Knock-out Hole for Ref.Piping (front)	

HP	Liquid pipe	Gas pipe
8	9.52(3/8)	19.05(3/4)
10	9.52(3/8)	22.22(7/8)
12	12.70(1/2)	28.58(1-1/8)
14	12.70(1/2)	28.58(1-1/8)
16	12.70(1/2)	28.58(1-1/8)
18	15.88(5/8)	28.58(1-1/8)
20	15.88(5/8)	28.58(1-1/8)
22	15.88(5/8)	28.58(1-1/8)
24	15.88(5/8)	34.92(1-3/8)
26	19.05(3/4)	34.92(1-3/8)

Note:
1. Detail A and SECTION B-B indicate the dimension after fixing the attached piping.
2. Item 3-6: Knock-out hole
3. View C indicate the dimension of knock-out hole (bottom)
4. Pipe [Ø, mm(inch)]: Brazing connection

Specifications

VRF

DVM S2 Standard Heat Pump (2-Pipe)

- Erp (Ecodesign) compliant and Eurovent certified.
- Advanced Flash Injection™ technology.
- Active AI Pressure Control.
- Active AI Defrost.
- Active AI Refrigerant analysis.
- Durafin™ Ultra Heat Exchanger Fin.
- Optional Slimmer Liquid Pipe.
- On-device Inverter Checker™.

Model				AM080AXVAGH/EU	AM100AXVAGH/EU	AM120AXVAGH/EU
Power Supply			Φ, #, V, Hz	3Φ, 4, 380~415 V, 50 Hz	3Φ, 4, 380~415 V, 50 Hz	3Φ, 4, 380~415 V, 50 Hz
Performance	HP		HP	8	10	12
	Capacity	Cooling	kW	22.4	28.0	33.6
		Heating	kW	22.4	28.0	33.6
	Maximum number of connectable indoor units		ea	14	18	21
	Total capacity of the connected indoor units	Min.	kW	11.2	14.0	16.8
		Max.	kW	29.1	36.4	43.7
Power	Current Input	Cooling	A	12.60	18.41	19.83
		Heating	A	9.50	12.90	14.82
	Current	MCA	A	18.0	23.0	25.0
		MFA	A	25	32	32
Energy Efficiency[1]	SEER		W/W	6.5	6.2	6.6
	SCOP		W/W	4.2	4.2	4.4
	ηs.c		%	257	245	261
	ηs.h		%	165	165	173
Compressor	Output		kW x n	4.39 x 1	6.67 x 1	6.67 x 1
	Oil	Type	-	PVE	PVE	PVE
		Initial Charge	cc x n	900 x 1	1,100 x 1	1,100 x 1
Fan	Type		-	Propeller	Propeller	Propeller
	Discharge direction		-	Vertical	Vertical	Vertical
	Number of Fans		ea	1	1	1
	Airflow Rate		m³/min	151	167	196
			l/s	2,515.00	2,779.00	3,260.00
	External Static Pressure	Max.	mmAq	11	11	11
			Pa	110	110	110
Fan Motor	Type		-	BLDC Motor	BLDC Motor	BLDC Motor
	Output		W x n	630 x 1	630 x 1	630 x 1
Piping Connections	Liquid Pipe		ø, mm	9.52	9.52	12.70
			ø, inch	3/8	3/8	1/2
	Gas Pipe		ø, mm	19.05	22.22	28.58
			ø, inch	3/4	7/8	1 1/8
	Piping length (ODU-IDU)[3]	Max. (Equiv.)	m	200 [220]	200 [220]	200 [220]
	Piping length (1st Branch - IDU)[3]	Max.	m	90	90	90
	Total piping length (System)	Max.	m	1,000	1,000	1,000
	Level difference (ODU in highest position)[3]	Max.	m	110	110	110
	Level difference (IDU in highest position)[3]	Max.	m	110	110	110
	Level Difference (IDU-IDU)[3]	Max.	m	50	50	50
Wiring Connections	Transmission Cable		mm²	0.75	0.75	0.75
	Remark		-	F1, F2	F1, F2	F1, F2
Refrigerant	Type		-	R410A (Fluorinated greenhouse gas, GWP=2,088)		
	Factory Charging		kg	5.5	5.5	7.0
			tCO_2e	11.48	11.48	14.62
Sound	Sound Pressure[2]	Cooling	dB(A)	53	56	61
		Heating	dB(A)	58	60	63
	Sound Power	Cooling	dB(A)	75	78	81
External Dimensions	Net Weight		kg	175	185	205
	Net Dimensions (W x H x D)		mm	930 x 1,695 x 765	930 x 1,695 x 765	930 x 1,695 x 765
Operating Temperature Range	Cooling		°C	-5~50	-5~50	-5~50
	Heating		°C	-25~24	-25~24	-25~24

[1] Performances are based on the following test conditions:
- Cooling: Indoor temperature: 27 °C DB, 19 °C WB, Outdoor temperature: 35 °C DB, 24 °C WB
- Heating: Indoor temperature: 20 °C DB, 15 °C WB, Outdoor temperature: 7 °C DB, 6 °C WB
- Equivalent refrigerant piping: 7.5 m, Level differences: 0 m

[2] Sound pressure level is obtained in an anechoic room. Sound pressure level is a relative value, depending on the distance and acoustic environment. Sound pressure level may differ according to operating conditions. Sound power level is an absolute value that a sound source generates. Sound Power: ODU and IDU operation mode is "Cooling" and hydro unit is "Heating".

[3] ODU: Outdoor Unit, IDU: Indoor Unit

AM140AXVAGH/EU	AM160AXVAGH/EU	AM180AXVAGH/EU	AM200AXVAGH/EU	AM220AXVAGH/EU	AM240AXVAGH/EU	AM260AXVAGH/EU
3Φ, 4, 380~415 V, 50 Hz	3Φ, 4, 380~415 V, 50 Hz	3Φ, 4, 380~415 V, 50 Hz	3Φ, 4, 380~415 V, 50 Hz	3Φ, 4, 380~415 V, 50 Hz	3Φ, 4, 380~415 V, 50 Hz	3Φ, 4, 380~415 V, 50 Hz
14	16	18	20	22	24	26
40.0	45.0	50.4	56.0	61.6	67.2	72.8
40.0	45.0	50.4	56.0	61.6	67.2	68.0
26	29	32	36	40	43	47
20.0	22.5	25.2	28.0	30.8	33.6	36.4
52.0	58.5	65.5	72.8	80.1	87.4	94.6
27.72	29.47	33.87	39.87	45.43	50.05	58.83
18.81	20.13	22.29	26.49	28.11	45.58	46.54
29.0	32.0	39.2	43.0	46.0	55.0	60.0
32	40	50	63	63	63	75
6.4	6.5	6.1	6.2	5.9	5.6	5.1
4.2	4.3	4.2	4.1	4.1	3.7	3.7
253	257	241	245	233	221	201
165	169	165	161	161	145	145
6.67 x 1	8.93 x 1	8.93 x 1	8.93 x 1	6.67 x 2	6.67 x 2	6.67 x 2
PVE	PVE	PVE	PVE	PVE	PVE	PVE
1,100 x 1	1,400 x 1	1,400 x 1	1,400 x 1	1,100 x 2	1,100 x 2	1,100 x 2
Propeller	Propeller	Propeller	Propeller	Propeller	Propeller	Propeller
Vertical	Vertical	Vertical	Vertical	Vertical	Vertical	Vertical
1	2	2	2	2	2	2
210	303	324	313	342	365	365
3,500.00	5,052.00	5,401.00	5,209.00	5,698.00	6,089.00	6,089.00
8	11	11	11	11	8	8
80	110	110	110	110	80	80
BLDC Motor	BLDC Motor	BLDC Motor	BLDC Motor	BLDC Motor	BLDC Motor	BLDC Motor
630 x 1	620 x 2	620 x 2	620 x 2	620 x 2	620 x 2	620 x 2
12.70	12.70	15.88	15.88	15.88	15.88	19.05
1/2	1/2	5/8	5/8	5/8	5/8	3/4
28.58	28.58	28.58	28.58	28.58	34.92	34.92
1 1/8	1 1/8	1 1/8	1 1/8	1 1/8	1 3/8	1 3/8
200 [220]	200 [220]	200 [220]	200 [220]	200 [220]	200 [220]	200 [220]
90	90	90	90	90	90	90
1,000	1,000	1,000	1,000	1,000	1,000	1,000
110	110	110	110	110	110	110
110	110	110	110	110	110	110
50	50	50	50	50	50	50
0.75	0.75	0.75	0.75	0.75	0.75	0.75
F1, F2	F1, F2	F1, F2	F1, F2	F1, F2	F1, F2	F1, F2
R410A (Fluorinated greenhouse gas, GWP=2,088)						
7.0	8.0	8.0	10.5	10.5	14.0	14.0
14.62	16.70	16.70	21.92	21.92	29.23	29.23
63	60	61	61	64	65	65
65	62	64	63	65	67	67
85	81	83	84	86	87	87
207	242	242	268	301	325	325
930 x 1,695 x 765	1,295 x 1,695 x 765	1,295 x 1,695 x 765	1,295 x 1,695 x 765	1,295 x 1,695 x 765	1,295 x 1,695 x 765	1,295 x 1,695 x 765
-5~50	-5~50	-5~50	-5~50	-5~50	-5~50	-5~50
-25~24	-25~24	-25~24	-25~24	-25~24	-25~24	-25~24

Dimensional drawings

DVM S2 Standard Heat Pump (2-Pipe)

AM080/100/120/140AXVAGH/EU

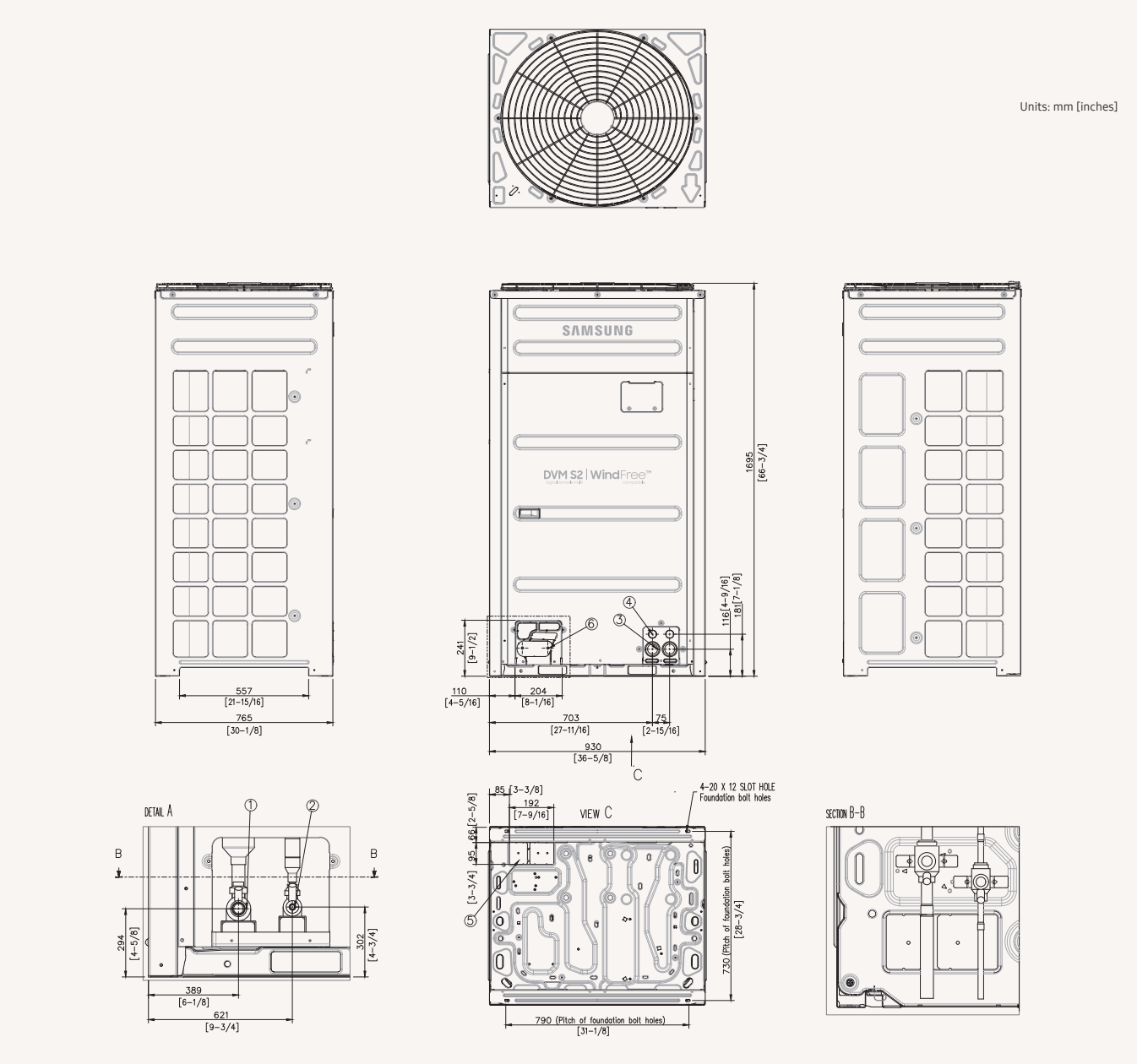

NO	Name	Description
1	Gas Ref.pipe	See NOTE 4.
2	Liquid Ref.pipe	See NOTE 4.
3	Power wiring conduit	Ø44
4	Communication wiring conduit	Ø34
5	Knock-out Hole for Ref.Piping (bottom)	
6	Knock-out Hole for Ref.Piping (front)	

HP	Liquid pipe	Gas pipe
8	9.52(3/8)	19.05(3/4)
10	9.52(3/8)	22.22(7/8)
12	12.70(1/2)	28.58(1-1/8)
14	12.70(1/2)	28.58(1-1/8)
16	12.70(1/2)	28.58(1-1/8)
18	15.88(5/8)	28.58(1-1/8)
20	15.88(5/8)	28.58(1-1/8)
22	15.88(5/8)	28.58(1-1/8)
24	15.88(5/8)	34.92(1-3/8)
26	19.05(3/4)	34.92(1-3/8)

Note:
1. Detail A and SECTION B-B indicate the dimension after fixing the attached piping.
2. Item 3-6: Knock-out hole
3. View C indicate the dimension of knock-out hole (bottom)
4. Pipe [Ø, mm(inch)]: Brazing connection

AM160/180/200/240/260AXVAGH/EU

Units: mm [inches]

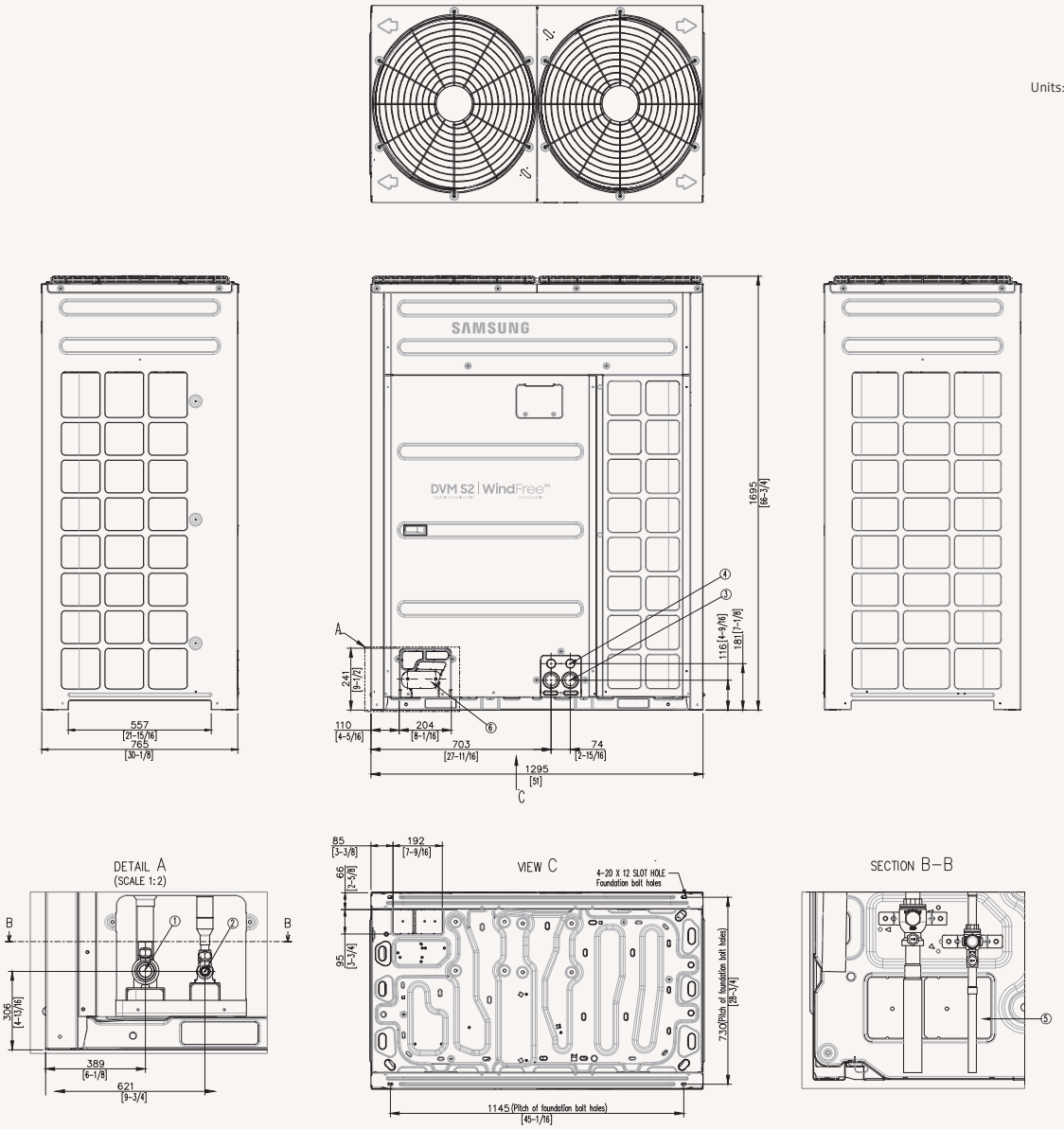

NO	Name	Description
1	Gas Ref.pipe	See NOTE 4.
2	Liquid Ref.pipe	See NOTE 4.
3	Power wiring conduit	Ø44
4	Communication wiring conduit	Ø34
5	Knock-out Hole for Ref.Piping (bottom)	
6	Knock-out Hole for Ref.Piping (front)	

HP	Liquid pipe	Gas pipe
8	9.52(3/8)	19.05(3/4)
10	9.52(3/8)	22.22(7/8)
12	12.70(1/2)	28.58(1-1/8)
14	12.70(1/2)	28.58(1-1/8)
16	12.70(1/2)	28.58(1-1/8)
18	15.88(5/8)	28.58(1-1/8)
20	15.88(5/8)	28.58(1-1/8)
22	15.88(5/8)	28.58(1-1/8)
24	15.88(5/8)	34.92(1-3/8)
26	19.05(3/4)	34.92(1-3/8)

Note:
1. Detail A and SECTION B-B indicate the dimension after fixing the attached piping.
2. Item 3-6: Knock-out hole
3. View C indicate the dimension of knock-out hole (bottom)
4. Pipe [Ø, mm(inch)]: Brazing connection

Specifications

VRF

DVM S2 High Efficiency Heat Pump (2-Pipe)

- Erp (Ecodesign) compliant and Eurovent certified.
- Advanced Flash Injection™ technology.
- Active AI Pressure Control.
- Active AI Defrost.
- Active AI Refrigerant analysis.
- Durafin™ Ultra Heat Exchanger Fin.
- Optional Slimmer Liquid Pipe.
- On-device Inverter Checker™.

Model				AM080AXVGGH/EU	AM100AXVGGH/EU	AM120AXVGGH/EU
Power Supply			Φ, #, V, Hz	3Φ, 4, 380~415 V, 50 Hz	3Φ, 4, 380~415 V, 50 Hz	3Φ, 4, 380~415 V, 50 Hz
Performance	HP		HP	8	10	12
	Capacity	Cooling	kW	22.4	28.0	33.6
		Heating	kW	22.4	28.0	33.6
	Maximum number of connectable indoor units		ea	14	18	21
	Total capacity of the connected indoor units	Min.	kW	11.2	14.0	16.8
		Max.	kW	29.1	36.4	43.7
Power	Current Input	Cooling	A	11.44	15.97	19.25
		Heating	A	9.09	11.41	14.37
	Current	Minimum SSC value	MVA	3.0	3.4	4.0
		MCA	A	18.0	21.2	25.0
		MFA	A	25	32	32
Energy Efficiency[1]	SEER		W/W	7.2	6.9	6.9
	SCOP		W/W	4.50	4.40	4.56
	ηs.c		%	285	273	273
	ηs.h		%	177	173	179.4
Compressor	Output		kW x n	4.39 x 1	6.67 x 1	6.67 x 1
	Oil	Type	-	PVE	PVE	PVE
		Initial Charge	cc x n	900 x 1	1,100 x 1	1,100 x 1
Fan	Type		-	Propeller	Propeller	Propeller
	Discharge direction		-	Top	Top	Top
	Number of Fans		ea	1	1	1
	Airflow Rate		m^3/min	164	181	196
			l/s	2,738.00	3,019.00	3,260.00
	External Static Pressure	Max.	mmAq	11	11	11
			Pa	110.00	110.00	110.00
Fan Motor	Type		-	BLDC Motor	BLDC Motor	BLDC Motor
	Output		W x n	TBD	TBD	TBD
Piping Connections	Liquid Pipe		ø, mm	9.52	9.52	12.70
			ø, inch	3/8	3/8	1/2
	Gas Pipe		ø, mm	19.05	22.22	28.58
			ø, inch	3/4	7/8	1 1/8
	Piping length (ODU-IDU)[3]	Max. (Equiv.)	m	200 [220]	200 [220]	200 [220]
	Piping length (1st Branch - IDU)[3]	Max.		90	90	90
	Total piping length (System)	Max.		1,000	1,000	1,000
	Level difference (ODU in highest position)[3]	Max.		110	110	110
	Level difference (IDU in highest position)[3]	Max.		110	110	110
	Level Difference (IDU-IDU)[3]	Max.		50	50	50
Wiring Connections	Transmission Cable		mm^2	0.75	0.75	0.75
	Remark		-	F1, F2	F1, F2	F1, F2
Refrigerant	Type		-	R410A (Fluorinated greenhouse gas, GWP=2,088)		
	Factory Charging		kg	7.0	7.0	7.0
			tCO_2e	14.62	14.62	14.62
Sound	Sound Pressure[2]	Cooling	dB(A)	53	56	61
		Heating	dB(A)	58	60	63
	Sound Power	Cooling	dB(A)	75	78	81
External Dimensions	Net Weight		kg	194	205	205
	Net Dimensions (W x H x D)		mm	930 x 1,695 x 765	930 x 1,695 x 765	930 x 1,695 x 765
Operating Temperature Range	Cooling		°C	-5~50	-5~50	-5~50
	Heating			-25~24	-25~24	-25~24

[1] Performances are based on the following test conditions:
- Cooling: Indoor temperature: 27 °C DB, 19 °C WB, Outdoor temperature: 35 °C DB, 24 °C WB
- Heating: Indoor temperature: 20 °C DB, 15 °C WB, Outdoor temperature: 7 °C DB, 6 °C WB
- Equivalent refrigerant piping: 7.5 m, Level differences: 0 m

[2] Sound pressure level is obtained in an anechoic room. Sound pressure level is a relative value, depending on the distance and acoustic environment. Sound pressure level may differ according to operating conditions. Sound power level is an absolute value that a sound source generates. Sound Power: ODU and IDU operation mode is "Cooling" and hydro unit is "Heating".

[3] ODU: Outdoor Unit, IDU: Indoor Unit

AM140AXVGGH/EU	AM160AXVGGH/EU	AM180AXVGGH/EU	AM200AXVGGH/EU	AM220AXVGGH/EU	AM240AXVGGH/EU	AM260AXVGGH/EU
3Φ, 4, 380~415 V, 50 Hz	3Φ, 4, 380~415 V, 50 Hz	3Φ, 4, 380~415 V, 50 Hz	3Φ, 4, 380~415 V, 50 Hz	3Φ, 4, 380~415 V, 50 Hz	3Φ, 4, 380~415 V, 50 Hz	3Φ, 4, 380~415 V, 50 Hz
14	16	18	20	22	24	26
40.0	45.0	50.4	56.0	61.6	67.2	72.8
40.0	45.0	50.4	56.0	61.6	67.2	68.0
26	29	32	36	40	43	47
20.0	22.5	25.2	28.0	30.8	33.6	36.4
52.0	58.5	65.5	72.8	80.1	87.4	94.6
25.44	26.96	26.79	38.63	44.15	48.62	57.61
17.06	19.35	21.14	25.72	27.29	44.20	45.11
4.4	5.2	6.4	7.0	7.4	9.3	10.2
27.0	32.0	39.2	43.0	46.0	55.0	60.0
32	40	50	63	63	63	75
6.7	6.9	7.5	6.5	6.2	5.9	5.4
4.25	4.30	4.80	4.50	4.30	3.90	3.90
265	273	297	257	245	233	213
167	169	189	177	169	153	153
6.67 x 1	8.93 x 1	8.93 x 1	8.93 x 1	6.67 x 2	6.67 x 2	6.67 x 2
PVE	PVE	PVE	PVE	PVE	PVE	PVE
1,100 x 1	1,400 x 1	1,400 x 1	1,400 x 1	1,100 x 2	1,100 x 2	1,100 x 2
Propeller	Propeller	Propeller	Propeller	Propeller	Propeller	Propeller
Top	Top	Top	Top	Top	Top	Top
2	2	2	2	2	2	2
291	292	313	313	342	365	365
4,852.00	4,866.00	5,209.00	5,209.00	5,698.00	6,089.00	6,089.00
11	11	11	11	11	8	8
110.00	110.00	110.00	110.00	110.00	80.00	80.00
BLDC Motor	BLDC Motor	BLDC Motor	BLDC Motor	BLDC Motor	BLDC Motor	BLDC Motor
TBD	TBD	TBD	TBD	TBD	TBD	TBD
12.70	12.70	15.88	15.88	15.88	15.88	19.05
1/2	1/2	5/8	5/8	5/8	5/8	3/4
28.58	28.58	28.58	28.58	28.58	34.92	34.92
1 1/8	1 1/8	1 1/8	1 1/8	1 1/8	1 3/8	1 3/8
200 [220]	200 [220]	200 [220]	200 [220]	200 [220]	200 [220]	200 [220]
90	90	90	90	90	90	90
1,000	1,000	1,000	1,000	1,000	1,000	1,000
110	110	110	110	110	110	110
110	110	110	110	110	110	110
50	50	50	50	50	50	50
0.75	0.75	0.75	0.75	0.75	0.75	0.75
F1, F2	F1, F2	F1, F2	F1, F2	F1, F2	F1, F2	F1, F2
R410A (Fluorinated greenhouse gas, GWP=2,088)						
8.0	10.5	10.5	10.5	10.5	14.0	14.0
16.70	21.92	21.92	21.92	21.92	29.23	29.23
58	58	59	61	64	65	65
61	61	63	63	65	67	67
81	81	81	84	86	87	87
233	262	268	268	301	325	325
1,295 x 1,695 x 765	1,295 x 1,695 x 765	1,295 x 1,695 x 765	1,295 x 1,695 x 765	1,295 x 1,695 x 765	1,295 x 1,695 x 765	1,295 x 1,695 x 765
-5~50	-5~50	-5~50	-5~50	-5~50	-5~50	-5~50
-25~24	-25~24	-25~24	-25~24	-25~24	-25~24	-25~24

Dimensional drawings

DVM S2 High Efficiency Heat Pump (2-Pipe)

AM080/100/120AXVGGH/EU

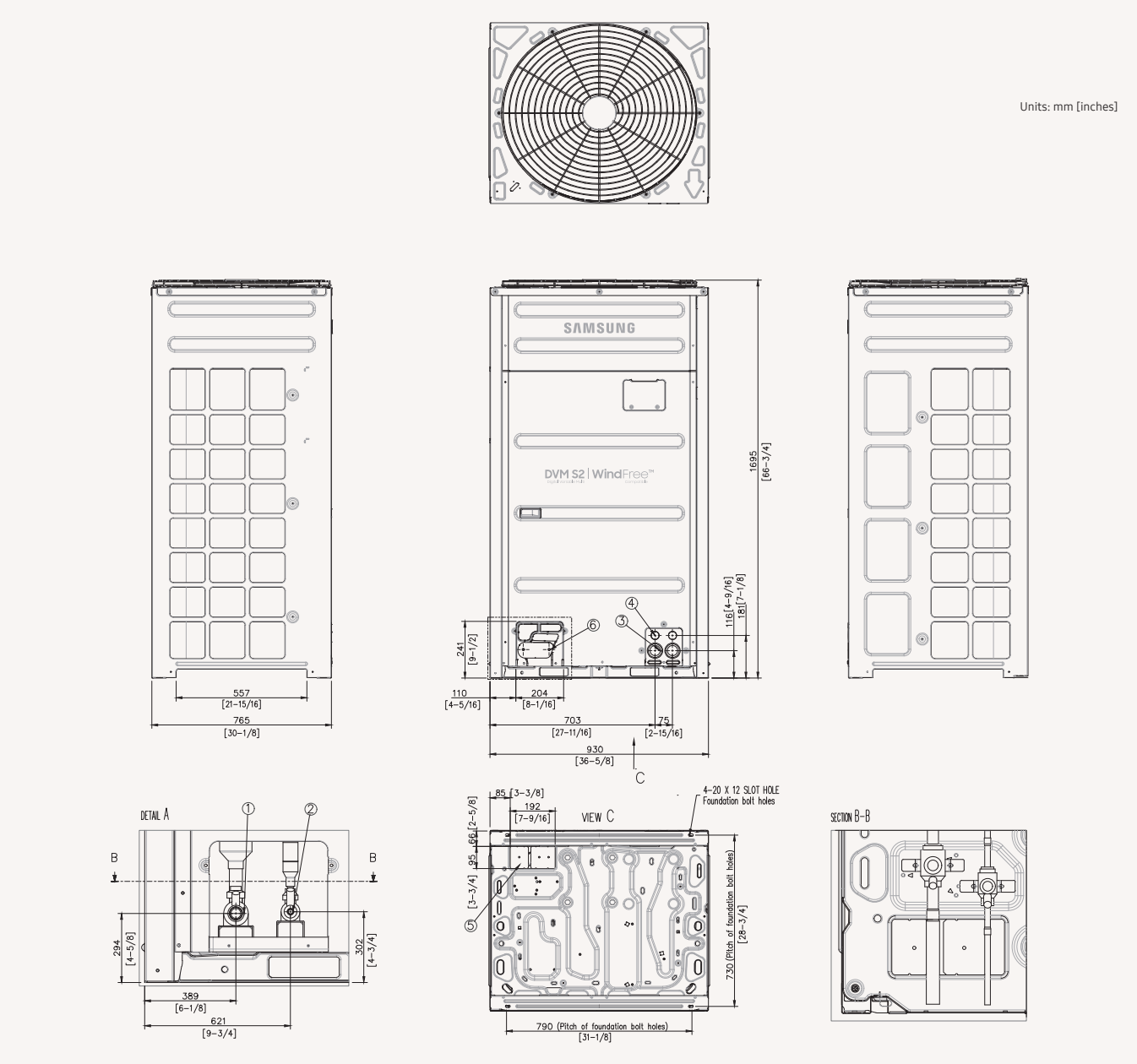

NO	Name	Description
1	Gas Ref.pipe	See NOTE 4.
2	Liquid Ref.pipe	See NOTE 4.
3	Power wiring conduit	Ø44
4	Communication wiring conduit	Ø34
5	Knock-out Hole for Ref.Piping (bottom)	
6	Knock-out Hole for Ref.Piping (front)	

HP	Liquid pipe	Gas pipe
8	9.52(3/8)	19.05(3/4)
10	9.52(3/8)	22.22(7/8)
12	12.70(1/2)	28.58(1-1/8)
14	12.70(1/2)	28.58(1-1/8)
16	12.70(1/2)	28.58(1-1/8)
18	15.88(5/8)	28.58(1-1/8)
20	15.88(5/8)	28.58(1-1/8)
22	15.88(5/8)	28.58(1-1/8)
24	15.88(5/8)	34.92(1-3/8)
26	19.05(3/4)	34.92(1-3/8)

Note:
1. Detail A and SECTION B-B indicate the dimension after fixing the attached piping.
2. Item 3-6: Knock-out hole
3. View C indicate the dimension of knock-out hole (bottom)
4. Pipe [Ø, mm(inch)]: Brazing connection

AM140/160/180/200/240/260AXVGGH/EU

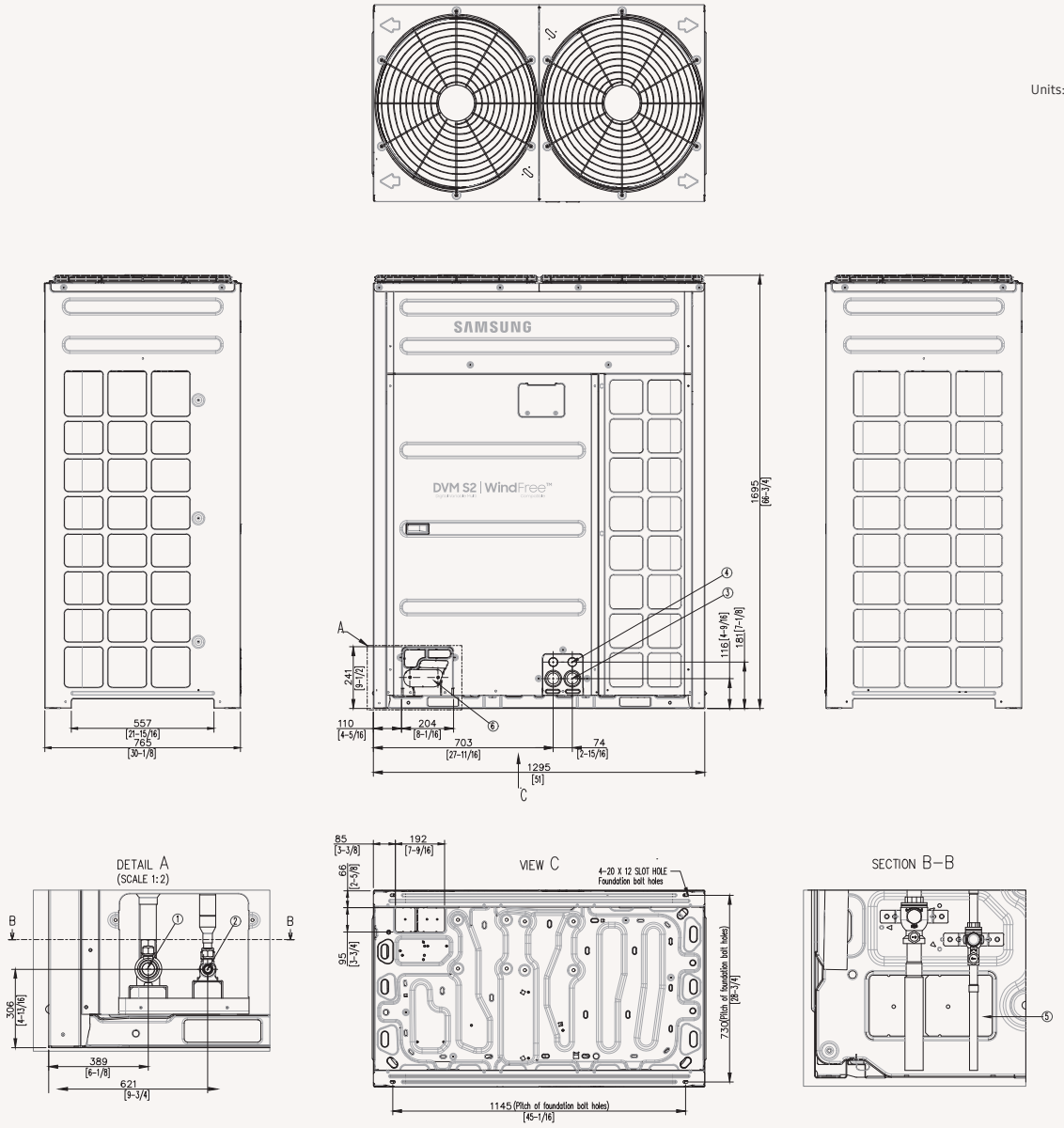

NO	Name	Description
1	Gas Ref.pipe	See NOTE 4.
2	Liquid Ref.pipe	See NOTE 4.
3	Power wiring conduit	Ø44
4	Communication wiring conduit	Ø34
5	Knock-out Hole for Ref.Piping (bottom)	
6	Knock-out Hole for Ref.Piping (front)	

HP	Liquid pipe	Gas pipe
8	9.52(3/8)	19.05(3/4)
10	9.52(3/8)	22.22(7/8)
12	12.70(1/2)	28.58(1-1/8)
14	12.70(1/2)	28.58(1-1/8)
16	12.70(1/2)	28.58(1-1/8)
18	15.88(5/8)	28.58(1-1/8)
20	15.88(5/8)	28.58(1-1/8)
22	15.88(5/8)	28.58(1-1/8)
24	15.88(5/8)	34.92(1-3/8)
26	19.05(3/4)	34.92(1-3/8)

Note:
1. Detail A and SECTION B-B indicate the dimension after fixing the attached piping.
2. Item 3-6: Knock-out hole
3. View C indicate the dimension of knock-out hole (bottom)
4. Pipe [Ø, mm(inch)]: Brazing connection

Specifications

VRF

DVM S Eco Heat Recovery (With Heat Recovery Changer Kit)

- Horizontal discharge and rear suction by means of two propeller BLDC Inverter fans.
- Each module houses one Twin BLDC Rotatory compressor.
- Night Silent Mode available.
- Eurovent certified and ErP (Ecodesign) compliant.
- Four-way direction piping connection.

Model				AM040BXMDER/EU	AM050BXMDER/EU	AM060BXMDER/EU
Power Supply			Φ, V, Hz	1Φ, 220~240 V, 50 Hz	1Φ, 220~240 V, 50 Hz	1Φ, 220~240 V, 50 Hz
Performance	HP		HP	4	5	6
	Capacity	Cooling	kW	12.1	14.0	15.5
		Heating	kW	12.1	14.0	15.5
Power	Power Input (Nominal)	Cooling	kW	3.87	5	5.74
		Heating	kW	3.04	3.83	4.43
	Current Input (Nominal)	Cooling	A	17.7	22.9	26.3
		Heating	A	13.9	17.5	20.3
	Current	MCA	A	22	24	30
		MFA	A	25	32	40
Energy Efficiency[1]	EER (Nominal Cooling)		W/W	3.13	2.8	2.7
	COP (Nominal Heating)		W/W	3.98	3.66	3.5
	SEER (Cassette)		W/W	7.9	7.4	7.75
	SCOP (Cassette)		W/W	4.65	4.65	4.9
Compressor	Type		-	Twin BLDC Rotary	Twin BLDC Rotary	Twin BLDC Rotary
	Output		kW x n	4.04 x 1	4.04 x 1	4.04 x 1
	Oil	Type	-	PVE	PVE	PVE
		Initial Charge	cc	1,700	1,700	1,700
Fan	Type & Discharge direction		-	Propeller	Propeller	Propeller
			-	Horizontal	Horizontal	Horizontal
	Number of Fans		EA	2	2	2
	Airflow Rate	(H/M/L)	m^3/min	100	100	100
			l/s	1,667	1,667	1,667
	External Static Pressure	Max.	mmAq	3	3	3
			Pa	29.4	29.4	29.4
Fan Motor	Model		-	BLDC Motor	BLDC Motor	BLDC Motor
	Output x n		W x n	125.0 x 2	125.0 x 2	125.0 x 2
Piping Connections	Liquid Pipe		ø, mm	9.52	9.52	9.52
			ø, inch	3/8	3/8	3/8
	Gas Pipe		ø, mm	15.88	15.88	15.88
			ø, inch	5/8	5/8	5/8
	Discharge Gas Pipe		ø, mm	15.88	15.88	15.88
			ø, inch	5/8	5/8	5/8
	Piping length (ODU-IDU)	Max. [Equiv.]	m	150 (75)	150 (75)	150 (75)
	Piping length (1st Branch-IDU)	Max	m	40	40	40
	Total Piping length (System)	Max	m	300	300	300
	Level difference (ODU in highest position)	Max	m	50	50	50
	Level difference (IDU in highest position)	Max	m	40	40	40
	Level difference (IDU-ODU)	Max	m	50	50	50
Wiring Connections	Communication	Min.	m	0.75	0.75	0.75
		Remark	-	F1, F2	F1, F2	F1, F2
Refrigerant	Type		-	R410A (Fluorinated greenhouse gas, GWP=2,088)		
	Factory Charging		kg	3.2	3.2	3.3
			kg / tCO_2e	6.68	6.68	6.89
Sound	Sound Pressure[2] (Cooling)		dB(A)	51	52	53
	Sound Pressure[2] (Heating)		dB(A)	55	55	55
	Sound Power		dB(A)	68	69	70
External Dimensions	Net Weight		kg	97	97	100
	Net Dimensions (W x H x D)		mm	940 x 1,210 x 330	940 x 1,210 x 330	940 x 1,210 x 330
Operating Temperature Range	Cooling		℃	-5.0~48.0	-5.0~48.0	-5.0~48.0
	Heating		℃	-25.0~26.0	-25.0~26.0	-25.0~26.0

AM040BXMDGR/EU	AM050BXMDGR/EU	AM060BXMDGR/EU
3Φ, 380~415 V, 50 Hz	3Φ, 380~415 V, 50 Hz	3Φ, 380~415 V, 50 Hz
4	5	6
12.1	14.0	15.5
12.1	14.0	15.5
3.87	5	5.74
3.04	3.83	4.43
5.9	7.6	8.7
4.6	5.8	6.7
16.1	16.1	16.1
20	20	20
3.13	2.8	2.7
3.98	3.66	3.5
7.9	7.4	7.75
4.65	4.65	4.9
Twin BLDC Rotary	Twin BLDC Rotary	Twin BLDC Rotary
4.04 x 1	4.04 x 1	4.04 x 1
PVE	PVE	PVE
1,700	1,700	1,700
Propeller	Propeller	Propeller
Horizontal	Horizontal	Horizontal
2	2	2
100	100	100
1,667	1,667	1,667
3	3	3
29.4	29.4	29.4
BLDC Motor	BLDC Motor	BLDC Motor
125.0 x 2	125.0 x 2	125.0 x 2
9.52	9.52	9.52
3/8	3/8	3/8
15.88	15.88	15.88
5/8	5/8	5/8
15.88	15.88	15.88
5/8	5/8	5/8
150 (75)	150 (75)	150 (75)
40	40	40
300	300	300
50	50	50
40	40	40
50	50	50
0.75	0.75	0.75
F1, F2	F1, F2	F1, F2
R410A (Fluorinated greenhouse gas, GWP=2,088)		
3.2	3.2	3.3
6.68	6.68	6.89
51	52	53
55	55	55
68	69	70
95	95	98
940 x 1,210 x 330	940 x 1,210 x 330	940 x 1,210 x 330
-5.0~48.0	-5.0~48.0	-5.0~48.0
-25.0~26.0	-25.0~26.0	-25.0~26.0

[1]Performances are based on the following test conditions:
- Cooling: Indoor temperature: 27 °C DB, 19 °C WB, Outdoor temperature: 35 °C DB, 24 °C WB
- Heating: Indoor temperature: 20 °C DB, 15 °C WB, Outdoor temperature: 7 °C DB, 6 °C WB
- Equivalent refrigerant piping: 7.5 m, Level differences: 0 m

[2]Sound pressure level is obtained in an anechoic room. Sound pressure level is a relative value, depending on the distance and acoustic environment. Sound pressure level may differ according to operating conditions. Sound power level is an absolute value that a sound source generates.
Sound Power: ODU and IDU operation mode is "Cooling" and hydro unit is "Heating".

EUROVENT CERTIFIED PERFORMANCE
www.eurovent-certification.com

Dimensional drawings

DVM S Eco Heat Recovery (With Heat Recovery Changer Kit)

AM040BXMDER/EU, AM050BXMDER/EU, AM060BXMDER/EU

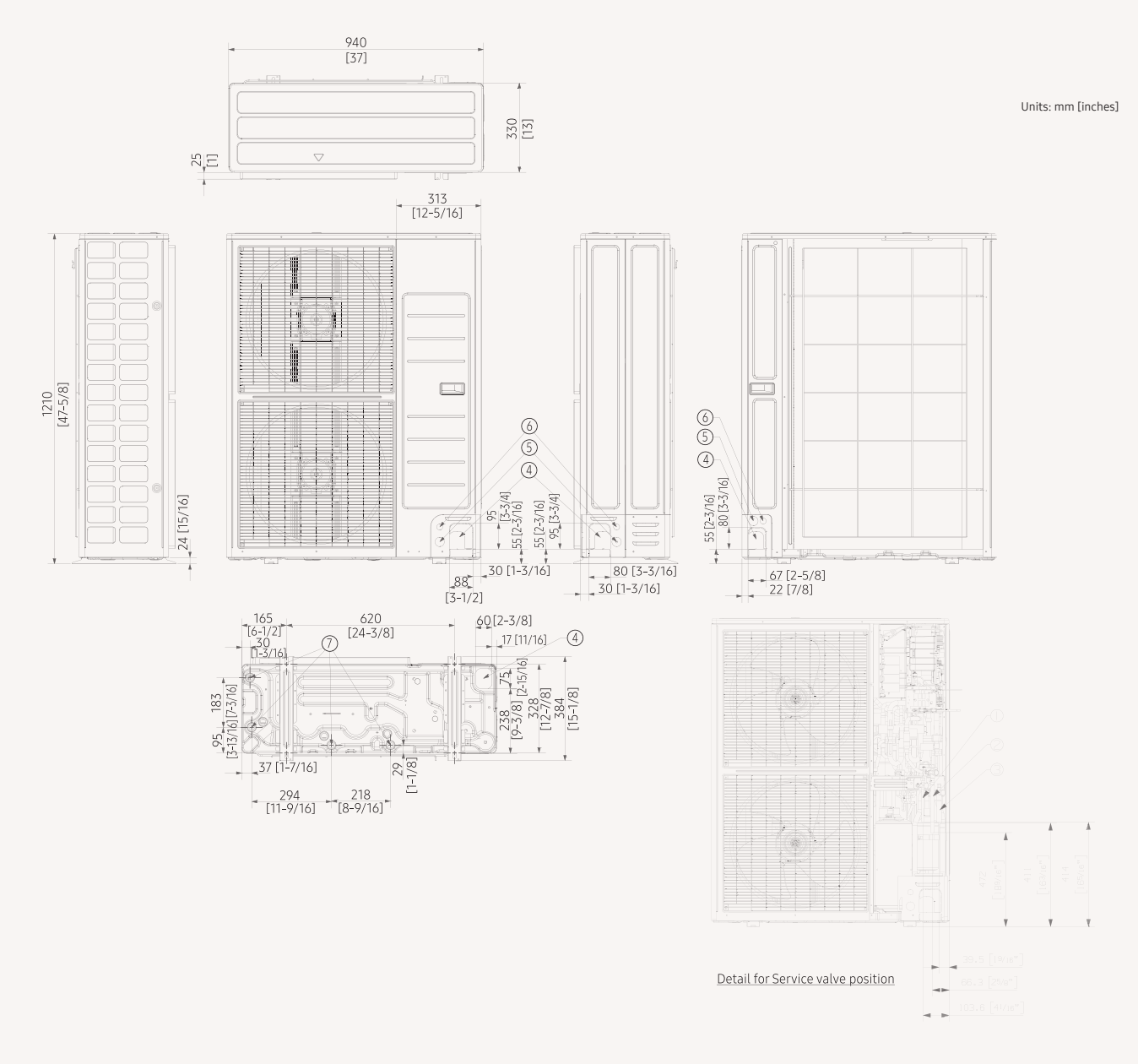

NO	Name	Description	
		4/5 hp	6 hp
1	Refrigerant liquid pipe	ø9.52 (ø3/8)	
2	Refrigerant gas pipe	ø15.88 (ø5/8)	ø19.05 (ø3/4)
3	Knock-out hole for pipe intake	Front/Side/Rear/Bottom	
4	Power wiring conduits	Front/Side/Rear, ø34.00 (ø1 3/8)	
5	Communication wiring conduits	Front/Side/Rear, ø22.00 (ø7/8)	
6	Drain holes	Connect with the provided drain plug.	

Specifications

VRF

DVM S2 High EER Heat Recovery (3-Pipe)

- Erp (Ecodesign) compliant and Eurovent certified.
- Advanced Flash Injection™ technology.
- Active AI Pressure Control.
- Active AI Defrost.
- Active AI Refrigerant analysis.
- Durafin™ Ultra Heat Exchanger Fin.
- Optional Slimmer Liquid Pipe.
- On-device Inverter Checker™.

Model				AM080AXVGGR/EU	AM100AXVGGR/EU	AM120AXVGGR/EU
Power Supply			Φ, #, V, Hz	3Φ, 4, 380~415 V, 50 Hz	3Φ, 4, 380~415 V, 50 Hz	3Φ, 4, 380~415 V, 50 Hz
Mode			-	HEAT RECOVERY	HEAT RECOVERY	HEAT RECOVERY
Performance	HP		HP	8	10	12
	Capacity	Cooling	kW	22.4	28.0	33.6
		Heating	kW	22.4	28.0	33.6
	Maximum number of connectable indoor units		ea	14	18	21
	Total capacity of the connected indoor units	Min.	kW	11.2	14.0	16.8
		Max.	kW	29.1	36.4	43.7
Power	Current Input	Cooling	A	11.44	15.97	19.25
		Heating	A	9.09	11.41	14.37
	Current	Minimum SSC value	MVA	3.0	3.4	4.0
		MCA	A	18.0	21.1	25.0
		MFA	A	25	32	32
Energy Efficiency[1]	SEER		W/W	7.2	6.9	6.9
	SCOP		W/W	4.5	4.4	4.56
	ηs.c		%	285	273	273
	ηs.h		%	177	173	179.4
Compressor	Output		-	4.39 x 1	6.67 x 1	6.67 x 1
	Oil	Type	-	PVE	PVE	PVE
		Initial Charge	cc x n	900 x 1	1,100 x 1	1,100 x 1
Fan	Type		-	Propeller	Propeller	Propeller
	Discharge direction		-	Top	Top	Top
	Number of Fans		ea	1	1	1
	Airflow Rate		m³/min	164	181	196
			l/s	2,738	3,019	3,260
	External Static Pressure	Max.	mmAq	11	11	11
			Pa	110	110	110
Fan Motor	Type		-	BLDC Motor	BLDC Motor	BLDC Motor
	Output		W x n	630 x 1	630 x 1	630 x 1
Piping Connections	Liquid Pipe		ø, mm	9.52	9.52	12.70
			ø, inch	3/8	3/8	1/2
	Gas Pipe		ø, mm	19.05	22.22	28.58
			ø, inch	3/4	7/8	1 1/8
	High Pressure Gas Pipe (HR Only)		ø, mm	15.88	19.05	19.05
			ø, inch	5/8	3/4	3/4
	Piping length (ODU-IDU)[3]	Max. (Equiv.)	m	200 [220]	200 [220]	200 [220]
	Piping length (1st Branch - IDU)[3]	Max.	m	90	90	90
	Total piping length (System)	Max.	m	1,000	1,000	1,000
	Level Difference (ODU in highest position)[3]	Max.	m	110	110	110
	Level Difference (IDU in highest position)[3]	Max.	m	110	110	110
	Level Difference (IDU-IDU)[3]	Max.	m	50	50	50
Wiring Connections	Transmission Cable		mm²	0.75	0.75	0.75
	Remark		-	F1, F2	F1, F2	F1, F2
Refrigerant	Type		-	R410A (Fluorinated greenhouse gas, GWP=2,088)		
	Factory Charging		kg	7.0	7.0	7.0
			tCO_2e	14.62	14.62	14.62
Sound	Sound Pressure[2]	Cooling	dB(A)	53	56	61
		Heating	dB(A)	58	60	63
	Sound Power		dB(A)	75	78	81
External Dimensions	Net Weight		kg	199	211	211
	Net Dimensions (W x H x D)		mm	930 x 1,695 x 765	930 x 1,695 x 765	930 x 1,695 x 765
Operating Temperature Range	Cooling		°C	-5~50	-5~50	-5~50
	Heating		°C	-25~24	-25~24	-25~24

[1] Performances are based on the following test conditions:
- Cooling: Indoor temperature: 27 °C DB, 19 °C WB, Outdoor temperature: 35 °C DB, 24 °C WB
- Heating: Indoor temperature: 20 °C DB, 15 °C WB, Outdoor temperature: 7 °C DB, 6 °C WB
- Equivalent refrigerant piping: 7.5 m, Level differences: 0 m

[2] Sound pressure level is obtained in an anechoic room. Sound pressure level is a relative value, depending on the distance and acoustic environment. Sound pressure level may differ according to operating conditions. Sound power level is an absolute value that a sound source generates. Sound Power: ODU and IDU operation mode is "Cooling" and hydro unit is "Heating".

[3] ODU: Outdoor Unit, IDU: Indoor Unit

EUROVENT CERTIFIED PERFORMANCE
www.eurovent-certification.com

AM140AXVGGR/EU	AM160AXVGGR/EU	AM180AXVGGR/EU	AM200AXVGGR/EU	AM220AXVGGR/EU	AM240AXVGGR/EU	AM260AXVGGR/EU
3Φ, 4, 380~415 V, 50 Hz	3Φ, 4, 380~415 V, 50 Hz	3Φ, 4, 380~415 V, 50 Hz	3Φ, 4, 380~415 V, 50 Hz	3Φ, 4, 380~415 V, 50 Hz	3Φ, 4, 380~415 V, 50/60 Hz	3Φ, 4, 380~415 V, 50/60 Hz
HEAT RECOVERY	HEAT RECOVERY	HEAT RECOVERY	HEAT RECOVERY	HEAT RECOVERY	HEAT RECOVERY	HEAT RECOVERY
14	16	18	20	22	24	26
40.0	45.0	50.4	56.0	61.6	67.2	72.8
40.0	45.0	50.4	56.0	61.6	67.2	68.0
26	29	32	36	40	43	47
20.0	22.5	25.2	28.0	30.8	33.6	36.4
52.0	58.5	65.5	72.8	80.1	87.4	94.6
25.44	26.96	26.79	38.63	44.15	48.62	57.61
17.06	19.35	21.14	25.72	27.29	44.20	45.11
4.4	5.2	6.4	7.0	7.4	9.3	10.2
27.0	32.0	39.2	43.0	46.0	55.0	60.0
32	40	50	63	63	63	75
6.7	6.9	7.5	6.5	6.2	5.9	5.4
4.25	4.3	4.8	4.5	4.3	3.9	3.9
265	273	297	257	245	233	213
167	169	189	177	169	153	153
6.67 x 1	8.93 x 1	8.93 x 1	8.93 x 1	6.67 x 2	6.67 x 2	6.67 x 2
PVE	PVE	PVE	PVE	PVE	PVE	PVE
1,100 x 1	1,400 x 1	1,400 x 1	1,400 x 1	1,100 x 2	1,100 x 2	1,100 x 2
Propeller	Propeller	Propeller	Propeller	Propeller	Propeller	Propeller
Top	Top	Top	Top	Top	Top	Top
2	2	2	2	2	2	2
291	292	313	313	342	365	365
4,852	4,866	5,209	5,209	5,698	6,089	6,089
11	11	11	11	11	8	8
110	110	110	110	110	80	80
BLDC Motor	BLDC Motor	BLDC Motor	BLDC Motor	BLDC Motor	BLDC Motor	BLDC Motor
620 x 2	620 x 2	620 x 2	620 x 2	620 x 2	620 x 2	620 x 2
12.70	12.70	15.88	15.88	15.88	15.88	19.05
1/2	1/2	5/8	5/8	5/8	5/8	3/4
28.58	28.58	28.58	28.58	28.58	34.92	34.92
1 1/8	1 1/8	1 1/8	1 1/8	1 1/8	1 3/8	1 3/8
22.22	22.22	22.22	28.58	28.58	28.58	28.58
7/8	7/8	7/8	1-1/8	1-1/8	1-1/8	1-1/8
200 [220]	200 [220]	200 [220]	200 [220]	200 [220]	200 [220]	200 [220]
90	90	90	90	90	90	90
1,000	1,000	1,000	1,000	1,000	1,000	1,000
110	110	110	110	110	110	110
110	110	110	110	110	110	110
50	50	50	50	50	50	50
0.75	0.75	0.75	0.75	0.75	0.75	0.75
F1, F2	F1, F2	F1, F2	F1, F2	F1, F2	F1, F2	F1, F2
R410A (Fluorinated greenhouse gas, GWP=2,088)						
8.0	10.5	10.5	10.5	10.5	14.0	14.0
16.70	21.92	21.92	21.92	21.92	29.23	29.23
58	58	59	61	64	65	65
61	61	63	63	65	67	67
81	81	81	84	86	87	87
237	268	274	274	309	332	332
1,295 x 1,695 x 765	1,295 x 1,695 x 765	1,295 x 1,695 x 765	1,295 x 1,695 x 765	1,295 x 1,695 x 765	1,295 x 1,695 x 765	1,295 x 1,695 x 765
-5~50	-5~50	-5~50	-5~50	-5~50	-5~50	-5~50
-25~24	-25~24	-25~24	-25~24	-25~24	-25~24	-25~24

Dimensional drawings

DVM S2 High EER Heat Recovery (3-Pipe)

AM080/100/120AXVGGR/EU

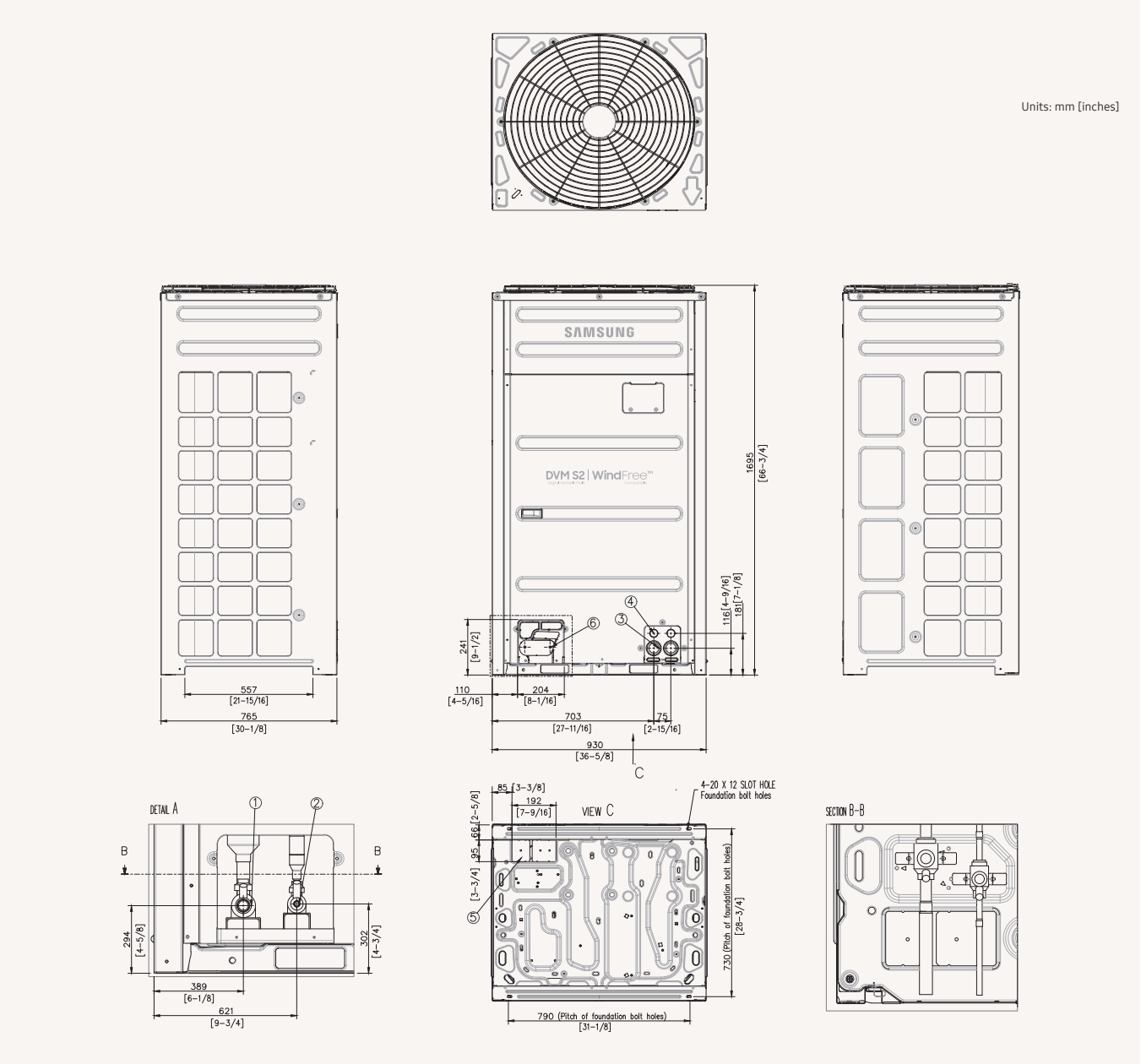

NO	Name	Description
1	Low Pressure Gas Ref.pipe	See NOTE 4.
2	High Pressure Ref.pipe	See NOTE 4.
3	Liquid Ref.pipe	See NOTE 4.
4	Power wiring conduit	Ø44
5	Communication wiring conduit	Ø34
6	Knock-out Hole for Ref.Piping (bottom)	
7	Knock-out Hole for Ref.Piping (front)	

HP	Liquid pipe	Low Pressure Gas pipe	High Pressure Gas pipe
8	9.52(3/8)	19.05(3/4)	15.88(5/8)
10	9.52(3/8)	22.22(7/8)	19.05(3/4)
12	12.70(1/2)	28.58(1-1/8)	19.05(3/4)
14	12.70(1/2)	28.58(1-1/8)	22.22(7/8)
16	12.70(1/2)	28.58(1-1/8)	22.22(7/8)
18	15.88(5/8)	28.58(1-1/8)	22.22(7/8)
20	15.88(5/8)	28.58(1-1/8)	28.58(1-1/8)
22	15.88(5/8)	28.58(1-1/8)	28.58(1-1/8)
24	15.88(5/8)	34.92(1-3/8)	28.58(1-1/8)
26	19.05(3/4)	34.92(1-3/8)	28.58(1-1/8)

Note:
1. Detail A and SECTION B-B indicate the dimension after fixing the attached piping.
2. Item 3-7: Knock-out hole
3. View C indicate the dimension of knock-out hole (bottom)
4. Pipe [Ø, mm(inch)]: Brazing connection

AM140/160/180/200/240/260AXVGGR/EU

Units: mm [inches]

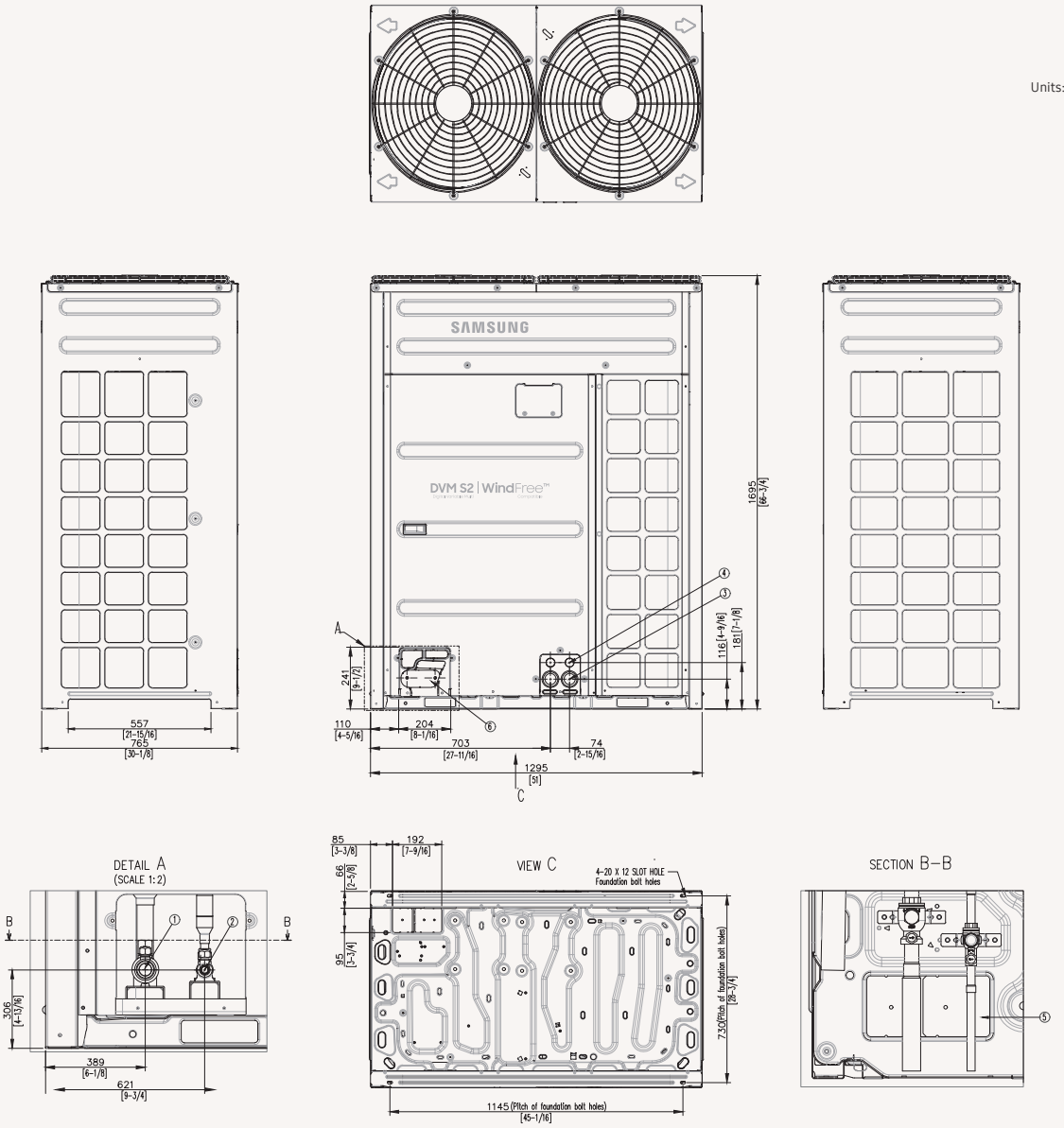

NO	Name	Description
1	Low Pressure Gas Ref.pipe	See NOTE 4.
2	High Pressure Ref.pipe	See NOTE 4.
3	Liquid Ref.pipe	See NOTE 4.
4	Power wiring conduit	Ø44
5	Communication wiring conduit	
6	Knock-out Hole for Ref.Piping (bottom)	
7	Knock-out Hole for Ref.Piping (front)	

HP	Liquid pipe	Low Pressure Gas pipe	High Pressure Gas pipe
8	9.52(3/8)	19.05(3/4)	15.88(5/8)
10	9.52(3/8)	22.22(7/8)	19.05(3/4)
12	12.70(1/2)	28.58(1-1/8)	19.05(3/4)
14	12.70(1/2)	28.58(1-1/8)	22.22(7/8)
16	12.70(1/2)	28.58(1-1/8)	22.22(7/8)
18	15.88(5/8)	28.58(1-1/8)	22.22(7/8)
20	15.88(5/8)	28.58(1-1/8)	28.58(1-1/8)
22	15.88(5/8)	28.58(1-1/8)	28.58(1-1/8)
24	15.88(5/8)	34.92(1-3/8)	28.58(1-1/8)
26	19.05(3/4)	34.92(1-3/8)	28.58(1-1/8)

Note:
1. Detail A and SECTION B-B indicate the dimension after fixing the attached piping.
2. Item 3-7: Knock-out hole
3. View C indicate the dimension of knock-out hole (bottom)
4. Pipe [Ø, mm(inch)]: Brazing connection

Specifications

DVM S Water

- Water Cooled, Variable Refrigerant Flow Heat Pump/ Heat Recovery Unit R410A.
- Suitable for indoor and outdoor installation.
- Each unit houses one (8~12 HP) or two (20~30 HP) Inverter Scroll compressors with Flash Injection technology.

MkW					AM080MXWANR/EU	AM100MXWANR/EU	AM120MXWANR/EU
Power Supply				Φ, #, V, Hz	3Φ, 4, 380~415 V, 50/60 Hz	3Φ, 4, 380~415 V, 50/60 Hz	3Φ, 4, 380~415 V, 50/60 Hz
Performance	HP			HP	8	10	12
	Capacity (Nominal)	Cooling		kW	22.4	28.0	33.6
		Heating		kW	25.2	31.5	37.8
	Maximum number of connectable indoor units			ea	14	18	22
	Total capacity of the connected indoor units	Min.		kW	11.2	14.0	16.8
		Max.		kW	29.1	36.4	43.7
Power	Power Input (Nominal)	Cooling		kW	3.67	4.87	6.00
		Heating		kW	3.97	5.04	6.25
	Current Input (Nominal)	Cooling		A	5.9	8.1	9.6
		Heating		A	6.4	8.4	10.0
	Current	Minimum SSC value		MVA	3.9	3.9	4.8
		MCA		A	16.1	16.1	20.0
		MFA		A	20	20	25
COP[1]	Nominal Cooling			W/W	6.10	5.75	5,60
	Nominal Heating			W/W	6.35	6.25	6.05
Compressor	Type			-	Inverter Scroll	Inverter Scroll	Inverter Scroll
	Output			kW × n	4.96 x 1	4.96 x 1	6.13 x 1
	Oil	Type		-	PVE	PVE	PVE
		Initial Charge		cc	3,900	3,900	3,900
Condenser	Type			-	Plate Heat Exchanger	Plate Heat Exchanger	Plate Heat Exchanger
	Pipe Size			ø, inch	PT1 1/4	PT1 1/4	PT1 1/4
	Pressure Drop			kPa	22	30	43
	Water Flow Rate			l/min	80	96	114
	Max. Pressure			MPa	1.96	1.96	1.96
	Liquid Pipe			ø, mm	9.52	9.52	12.70
				ø, inch	3/8	3/8	1/2
	Gas Pipe			ø, mm	19.05	22.22	28.58
				ø, inch	3/4	7/8	1 1/8
Piping Connections	Discharge Gas Pipe			ø, mm	15.88	19.05	19.05
				ø, inch	5/8	3/4	3/4
	Piping length	Outdoor-Indoor	Max.	m	170 (190)	170 (190)	170 (190)
		After branch	Max.	m	90	90	90
	Total piping length	System	Actual	m	500	500	500
	Level difference	Outdoor-Indoor	Outdoor unit in highest position	m	50	50	50
			Indoor unit in highest position	m	40	40	40
		Indoor-Indoor	Max.	m	50	50	50
Wiring Connections	Communication	Minimum		mm²	0.75	0.75	0.75
		Remark		-	F1, F2	F1, F2	F1, F2
Refrigerant	Type			-	R410A (Fluorinated greenhouse gas, GWP=2,088)		
	Factory Charging			kg	5.5	5.8	6.0
				tCO_2e	11.48	12.11	12.53
Sound	Sound Pressure[2]		Cooling	dB(A)	48	48	50
			Heating	dB(A)	51	51	52
	Sound Power			dB(A)	70	70	70
External Dimensions	Net Weight			kg	160.0	160.0	160.0
	Net Dimensions (W x H x D)			mm	770 x 1,000 x 545	770 x 1,000 x 545	770 x 1,000 x 545
Operating Temperature Range	Cooling			°C	10.0~45.0	10.0~45.0	10.0~45.0
	Heating			°C	10.0~45.0	10.0~45.0	10.0~45.0

AM200MXWANR/EU	AM300KXWANR/EU
3Φ, 4, 380~415 V, 50/60 Hz	3Φ, 4, 380~415 V, 50/60 Hz
20	30
56.0	84
63	94.5
36	55
28.0	42.0
72.8	109.2
10.77	16.80
10.86	16.88
17.3	26.4
17.4	26.5
7.7	-
32.2	48.0
40	63
5.20	5.00
5.80	5.60
Inverter Scroll	SSC Scroll x 2
4.96 x 2	6.75 x 2
PVE	PVE
6,200	6,200
Plate Heat Exchanger	Plate Heat Exchanger
PT 1 1/4	PT 2
54	50
190	285
1.96	1.96
15.88	19.05
5/8	3/4
28.58	34.92
1 1/8	1 3/8
28.58	28.58
1 1/8	1 1/8
170 (190)	170 (190)
90	90
500	500
50	50
40	40
50	50
0.75	0.75
F1, F2	F1, F2
R410A (Fluorinated greenhouse gas, GWP=2,088)	
9.8	11.0
20.46	22.96
51	55
52	58
73	75
240.0	280.0
1,100 x 1,000 x 545	1,100 x 1,000 x 545
10.0~45.0	10.0~45.0
10.0~45.0	10.0~45.0

[1]Performances are based on the following test conditions:
- Cooling: Indoor temperature: 27 °C DB, 19 °C WB, Inlet water temperature: 30 °C
- Heating: Indoor temperature: 20 °C DB, 15 °C WB, Inlet water temperature: 20 °C
- Equivalent refrigerant piping: 7.5 m, Level differences: 0 m

[2]Sound pressure level is obtained in an anechoic room. Sound pressure level is a relative value, depending on the distance and acoustic environment. Sound pressure level may differ according to operating conditions. Sound power level is an absolute value that a sound source generates.
Sound Power: ODU and IDU operation mode is "Cooling" and hydro unit is "Heating".

Dimensional Drawing

DVM S Water

AM080/100/120MXWANR/EU

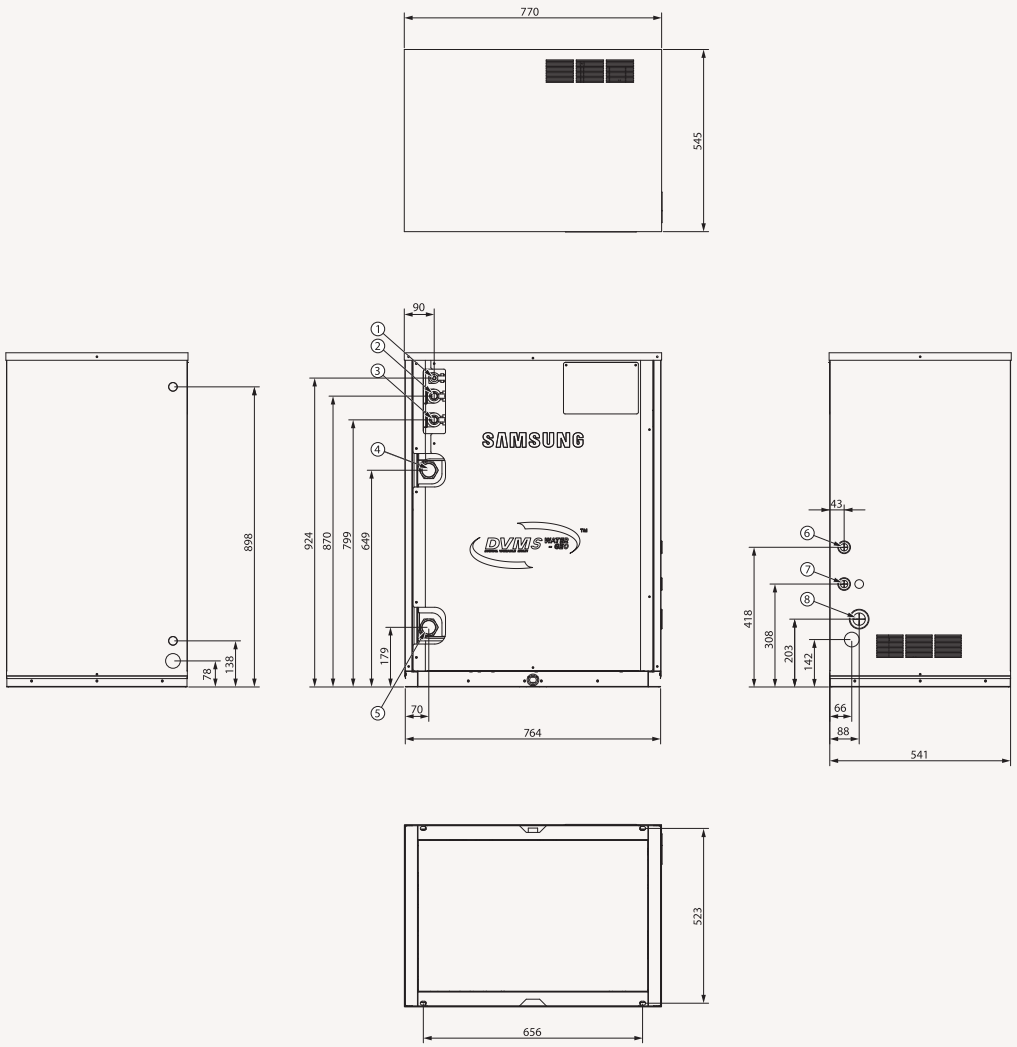

NO	Name	Description
1	Liquid Ref. pipe	ø19.05 (3/4)
2	High Pressure Gas Ref. pipe	ø28.58 (1 1/8)
3	Low Pressure Gas Ref. pipe	ø 34.92 (1 3/8)
4	Water outlet pipe	PT 2
5	Water inlet pipe	PT 2
6	Communication wiring conduits	
7	External contact wiring	
8	Power wiring conduits	

AM200MXWANR/EU

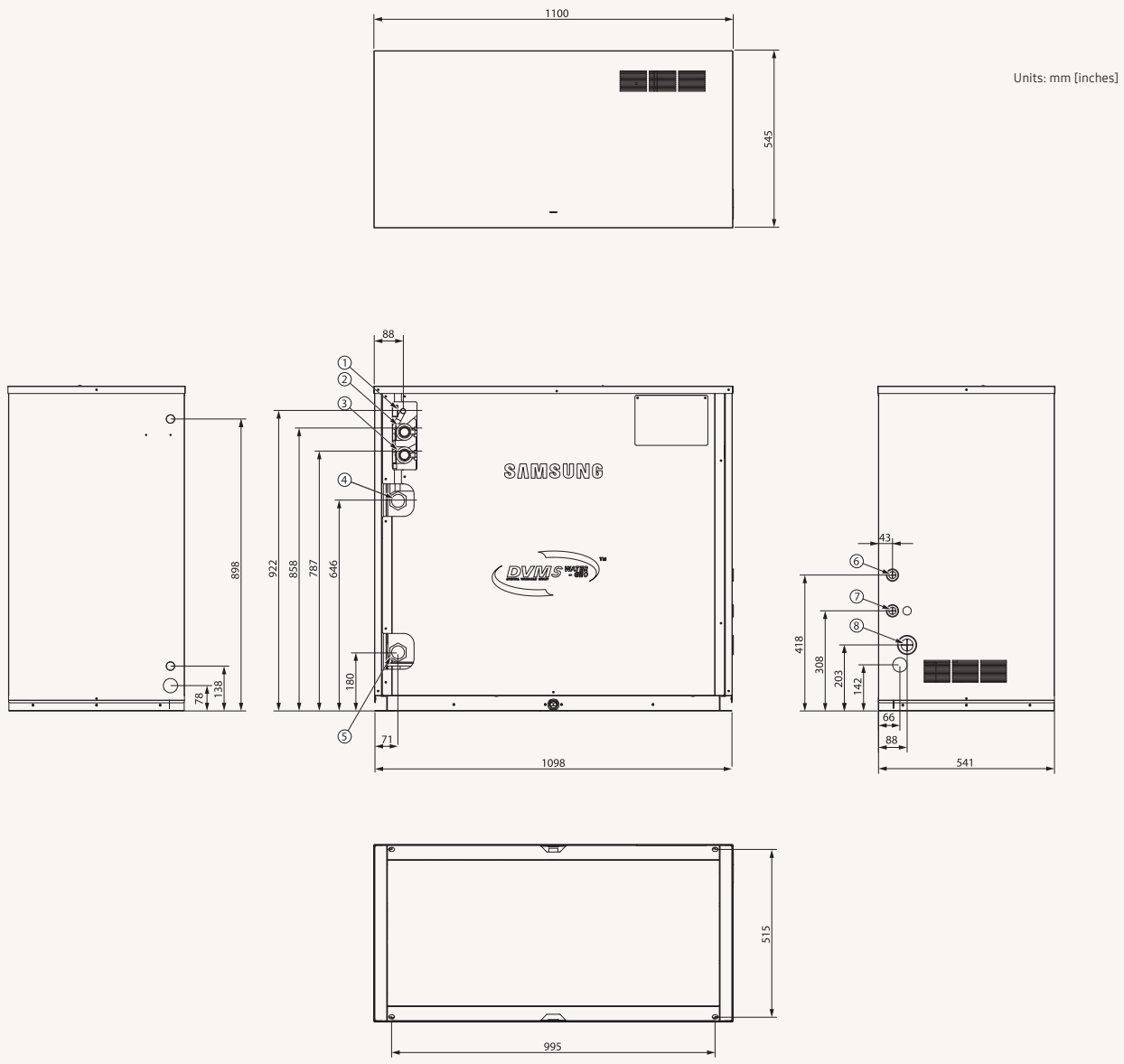

NO	Name	Description
1	Liquid Ref. pipe	15.88 (5/8)
2	High Pressure Gas Ref. pipe	ø28.58 (11/8)
3	Low Pressure Gas Ref. pipe	ø28.58 (11/8)
4	Water outlet pipe	PT 1 1/4
5	Water inlet pipe	PT 1 1/4
6	Communication wiring conduits	
7	External contact wiring	
8	Power wiring conduits	

Dimensional Drawing

DVM S Water

AM300MXWANR/EU

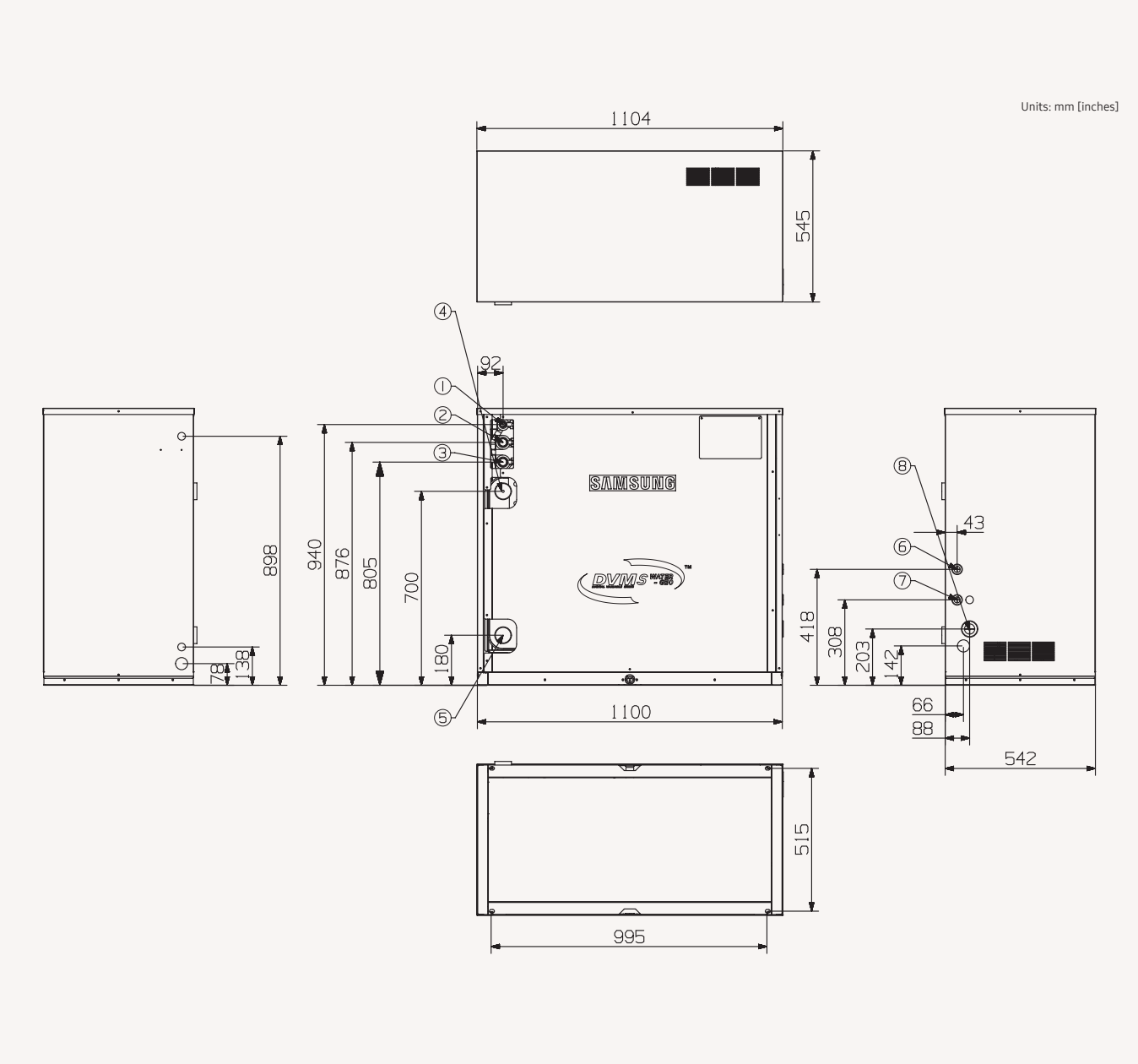

NO	Name	Description
1	Liquid Ref. pipe	ø19.05 (3/4)
2	High Pressure Gas Ref. pipe	ø28.58 (1 1/8)
3	Low Pressure Gas Ref. pipe	ø 34.92 (1 3/8)
4	Water outlet pipe	PT 2
5	Water inlet pipe	PT 2
6	Communication wiring conduits	
7	External contact wiring	
8	Power wiring conduits	

Specifications

WindFree™ 4-Way 600 x 600 Cassette

- Fast Cooling mode and WindFree™ Cooling mode.
- Four-way air supply via independently adjustable blades.
- Built-in condensation drain pump and humidity sensor.
- Direct drive fan powered by a BLDC motor.
- Can be controlled by Smartphone via Wi-Fi Kit.
- Motion Detect Sensor (Optional).

Model				AM015NNNDEH/EU	AM022NNNDEH/EU	AM028NNNDEH/EU
Power Supply			Φ, #, V, Hz	1Φ, 2, 220~240 V, 50 Hz	1Φ, 2, 220~240 V, 50 Hz	1Φ, 2, 220~240 V, 50 Hz
Performance	Capacity	Cooling	kW	1.5	2.2	2.8
		Heating	kW	1.7	2.5	3.2
Power	Power Input	Cooling	W	18	18	18
		Heating	W	18	18	18
	Current Input	Cooling	A	0.17	0.17	0.17
		Heating	A	0.17	0.17	0.17
	Current	MCA	A	0.2	0.2	0.2
		MFA	A	15	15	15
Fan	Type		-	Turbo Fan	Turbo Fan	Turbo Fan
	Number of Fans		ea	1	1	1
	Airflow Rate	H/M/L	m^3/min	8.2/7.0/6.3	9.0/7.7/6.5	10.0/8.5/7.5
			l/s	137/117/105	150/128/108	167/142/125
Fan Motor	Model		-	BLDC Motor	BLDC Motor	BLDC Motor
	Output x n		W	65 x 1	65 x 1	65 x 1
Piping Connections	Liquid Pipe		ø, mm	6.35	6.35	6.35
			ø, inch	1/4	1/4	1/4
	Gas Pipe		ø, mm	12.7	12.7	12.7
			ø, inch	1/2	1/2	1/2
	Drain Pipe		ø, mm	VP25 (OD 32, ID 25)	VP25 (OD 32, ID 25)	VP25 (OD 32, ID 25)
Wiring Connections	Communication	Min.	mm^2	0.75	0.75	0.75
		Remark	-	F1, F2	F1, F2	F1, F2
Refrigerant	Type		-	R410A (Fluorinated greenhouse gas, GWP=2,088)		
	Electronic Expansion Valve		-	EEV INCLUDED	EEV INCLUDED	EEV INCLUDED
Sound	Sound Pressure[1]	H/M/L	dB(A)	30.0/28.0/23.0	32.0/29.0/25.0	33.0/30.0/26.0
	Sound Power	Cooling	dB(A)	46	47	50
Dimensions	Net Weight		kg	12.0	12.0	12.0
	Net Dimensions (W × H × D)		mm	575 x 250 x 575	575 x 250 x 575	575 x 250 x 575
Panel	Model Name		-	PC4SUFMAN	PC4SUFMAN	PC4SUFMAN
Drain Pump	Drain Pump		-	INCLUDED	INCLUDED	INCLUDED
	Max. Lifting Height/Displacement		mm / litres/h	750/24	750/24	750/24

Accessories

Wireless Remote Controller	Simple Type Controller	Touch Controller	Wired Remote Controller	Wi-Fi Kit	External Room Sensor
AR-EH03E	MWR-SH00N	MWR-SH11N	MWR-WG00*N	MIM-H04EN	MRW-TA

Panel (Mandatory)	Motion Detect Sensor
PC4SUFMAN	MCR-SMD

[1] Sound pressure level is obtained in an anechoic room. Sound pressure level is a relative value, depending on the distance and acoustic environment. Sound pressure level may differ depending on operation conditions.

AM036NNNDEH/EU	AM045NNNDEH/EU	AM056NNNDEH/EU	AM060NNNDEH/EU
1Φ, 2, 220~240 V, 50 Hz	1Φ, 2, 220~240 V, 50 Hz	1Φ, 2, 220~240 V, 50 Hz	1Φ, 2, 220~240 V, 50 Hz
3.6	4.5	5.6	6.0
4.0	5.0	6.3	6.8
20	23	28	31
20	23	28	31
0.19	0.22	0.27	0.30
0.19	0.22	0.27	0.30
0.2	0.3	0.4	0.4
15	15	15	15
Turbo Fan	Turbo Fan	Turbo Fan	Turbo Fan
1	1	1	1
10.5/9.5/8.0	11.5/10.2/9.0	13.0/11.0/9.5	13.5/12.0/10.2
175/158/133	192/170/150	217/183/158	225/200/170
BLDC Motor	BLDC Motor	BLDC Motor	BLDC Motor
65 x 1	65 x 1	65 x 1	65 x 1
6.35	6.35	6.35	6.35
1/4	1/4	1/4	1/4
12.7	12.7	12.7	12.7
1/2	1/2	1/2	1/2
VP25 (OD 32, ID 25)	VP25 (OD 32, ID 25)	VP25 (OD 32, ID 25)	VP25 (OD 32, ID 25)
0.75	0.75	0.75	0.75
F1, F2	F1, F2	F1, F2	F1, F2
R410A (Fluorinated greenhouse gas, GWP=2,088)			
EEV INCLUDED	EEV INCLUDED	EEV INCLUDED	EEV INCLUDED
34.0/30.0/26.0	36.0/34.0/32.0	39.0/36.0/33.0	40.0/38.0/35.0
51	53	56	57
12.0	12.0	12.0	12.0
575 x 250 x 575	575 x 250 x 575	575 x 250 x 575	575 x 250 x 575
PC4SUFMAN	PC4SUFMAN	PC4SUFMAN	PC4SUFMAN
INCLUDED	INCLUDED	INCLUDED	INCLUDED
750/24	750/24	750/24	750/24

Technical Drawings

WindFree™ 4-Way 600 x 600 Cassette

AM***NNNDEH/EU

Units: mm [inches]

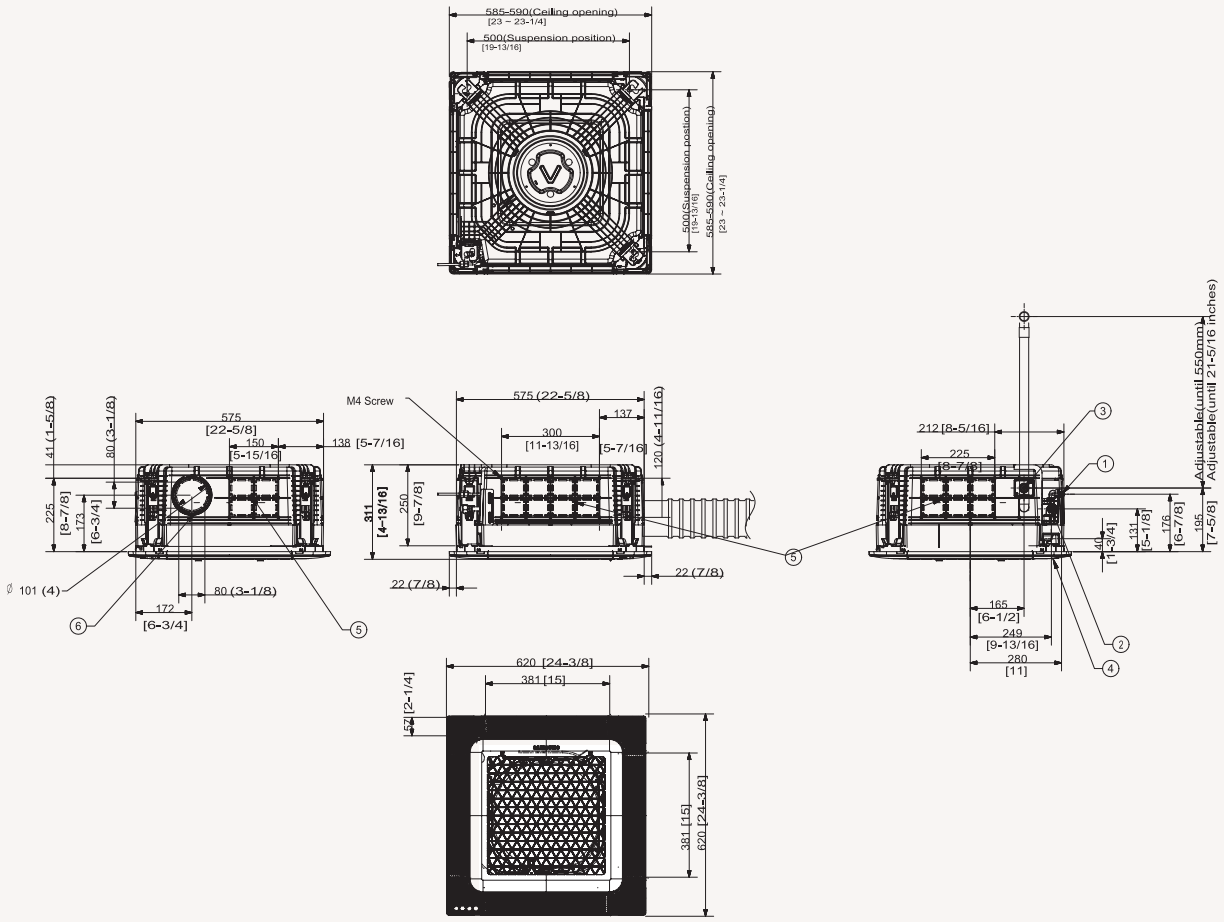

NO	Name	Description
1	Liquid pipe connection	ø6.35 (1/4)
2	Gas pipe connection	ø12.70 (1/2)
3	Drain pipe connection	VP25 (OD 32, ID 25)
4	Power supply/communication wiring conduits	Use M4 Screw
5	Fresh air intake knock-out hole	ø10 [4], use M4 Screw

Note: As for suspension bolt, please use M8~M10. (Procured at local site)

Specifications

WindFree™ 4-Way Cassette

- Fast Cooling mode and WindFree™ Cooling mode.
- Four-way air supply via independently adjustable blades.
- Built-in condensation drain pump and humidity sensor.
- Direct drive fan powered by a BLDC motor.
- Can be controlled by Smartphone via Wi-Fi Kit (Optional).
- Motion Detect Sensor (Optional).
- Air Purification Panel, Auto Elevation Panel (Optional).

Model				AM028AN4PKH/EU	AM036AN4PKH/EU	AM045AN4PKH/EU
Power Supply			Φ, #, V, Hz	1Φ, 2, 220~240 V, 50/60 Hz	1Φ, 2, 220~240 V, 50/60 Hz	1Φ, 2, 220~240 V, 50/60 Hz
Performance	Capacity	Cooling	kW	2.8	3.6	4.5
		Heating	kW	3.2	4.0	5.0
Power	Power Input	Cooling	W	24	26	28
		Heating	W	24	26	28
	Current Input	Cooling	A	0.25	0.27	0.30
		Heating	A	0.25	0.27	0.30
	Current	MCA	A	0.3	0.4	0.4
		MFA	A	15	15	15
Fan	Type		-	Turbo Fan	Turbo Fan	Turbo Fan
	Number of Fans		ea	1	1	1
	Airflow Rate H/M/L		m^3/min	14.4/13.4/12.4	15.4/14.4/13.4	16.3/15.4/14.4
			l/s	240/223/207	255/240/223	272/257/240
Fan Motor	Model		-	BLDC Motor	BLDC Motor	BLDC Motor
	Output x n		W	65 x 1	65 x 1	65 x 1
Piping Connections	Liquid Pipe		ø, mm	6.35	6.35	6.35
			ø, inch	1/4	1/4	1/4
	Gas Pipe		ø, mm	12.70	12.70	12.70
			ø, inch	1/2	1/2	1/2
	Drain Pipe		ø, mm	VP25 (OD 32,ID 25)	VP25 (OD 32,ID 25)	VP25 (OD 32, ID 25)
Wiring Connections	Communication	Minimum	mm^2	0.75	0.75	0.75
		Remark	-	F1, F2	F1, F2	F1, F2
Refrigerant	Type		-	R410A (Fluorinated greenhouse gas, GWP=2,088)		
	Electronic Expansion Valve		-	EEV INCLUDED	EEV INCLUDED	EEV INCLUDED
Sound	Sound Pressure[1]	H/M/L	dB(A)	30.0/28.0/27.0	31.0/30.0/28.0	33.0/31.0/29.0
	Sound Power	Cooling	dB(A)	46	47	49
Dimensions	Net Weight		kg	15.0	15.0	15.0
	Net Dimensions (W × H × D)		mm	840 x 204 x 840	840 x 204 x 840	840 x 204 x 840
Panel	Model Name		-	PC4NUFMAN	PC4NUFMAN	PC4NUFMAN
Drain Pump	Drain Pump		-	INCLUDED	INCLUDED	INCLUDED
	Max. Lifting Height/Displacement		mm / litres/h	750 / 24	750 / 24	750/24

Accessories

Wireless Remote Controller	Simple Type Controller	Touch Controller	Wired Remote Controller	External Room Sensor	Panel (Mandatory)
AR-EH03E	MWR-SH00N	MWR-SH11N	MWR-WG00*N	MRW-TA	PC4NUFMAN

Air Purification Panel (Optional)	Auto Elevation Panel (Optional)	Motion Detect Sensor
PC4NUCEAN	PC4NUXMAN	MCR-SMC

[1] Sound pressure level is obtained in an anechoic room. Sound pressure level is a relative value, depending on the distance and acoustic environment. Sound pressure level may differ depending on operation conditions.

AM056AN4PKH/EU	AM071AN4PKH/EU	AM090AN4PKH/EU	AM112AN4PKH/EU	AM128AN4PKH/EU	AM140AN4PKH/EU
1Φ, 2, 220~240 V, 50/60 Hz	1Φ, 2, 220~240 V, 50/60 Hz	1Φ, 2, 220~240 V, 50/60 Hz	1Φ, 2, 220~240 V, 50/60 Hz	1Φ, 2, 220~240 V, 50/60 Hz	1Φ, 2, 220~240 V, 50/60 Hz
5.6	7.1	9.0	11.2	12.8	14.0
6.3	8.0	10.0	12.5	13.8	16.0
32	34	55	78	95	115
32	34	55	78	95	115
0.32	0.35	0.45	0.60	0.75	0.85
0.32	0.35	0.45	0.60	0.75	0.85
0.4	0.5	0.6	0.8	1.0	1.1
15	15	15	15	15	15
Turbo Fan	Turbo Fan	Turbo Fan	Turbo Fan	Turbo Fan	Turbo Fan
1	1	1	1	1	1
16.4/14.6/12.8	18.2/15.4/12.8	24.4/19.9/15.5	26.6/21.0/15.5	35.4/29.2/24.3	37.9/31.7/25.5
273/243/213	303/257/213	407/332/258	43/350/258	590/487/405	632/528/425
BLDC Motor	BLDC Motor	BLDC Motor	BLDC Motor	BLDC Motor	BLDC Motor
65 x 1	65 x 1	65 x 1	65 x 1	97 x 1	97 x 1
6.35	9.52	9.52	9.52	9.52	9.52
1/4	3/8	3/8	3/8	3/8	3/8
12.70	15.88	15.88	15.88	15.88	15.88
1/2	5/8	5/8	5/8	5/8	5/8
VP25 (OD 32, ID 25)	VP25 (OD 32, ID 25)	VP25 (OD 32, ID 25)	VP25 (OD 32, ID 25)	VP25 (OD 32, ID 25)	VP25 (OD 32, ID 25)
0.75	0.75	0.75	0.75	0.75	0.75
F1, F2	F1, F2	F1, F2	F1, F2	F1, F2	F1, F2
R410A (Fluorinated greenhouse gas, GWP=2,088)					
EEV INCLUDED	EEV INCLUDED	EEV INCLUDED	EEV INCLUDED	EEV INCLUDED	EEV INCLUDED
35.0/33.0/29.0	37.0/34.0/30.0	39.0/35.0/30.0	41.0/36.0/30.0	42.0/37.0/35.0	44.0/39.0/35.0
51	53	55	59	58	60
16.5	16.5	18.0	18.0	21.5	21.5
840 x 204 x 840	840 x 204 x 840	840 x 246 x 840	840 x 246 x 840	840 x 288 x 840	840 x 288 x 840
PC4NUFMAN	PC4NUFMAN	PC4NUFMAN	PC4NUFMAN	PC4NUFMAN	PC4NUFMAN
INCLUDED	INCLUDED	INCLUDED	INCLUDED	INCLUDED	INCLUDED
750/24	750/24	750/24	750/24	750/24	750/24

Technical Drawings

WindFree™ 4-Way Cassette

AM028/036/045/056/071AN4PKH/EU

Units: mm [inches]

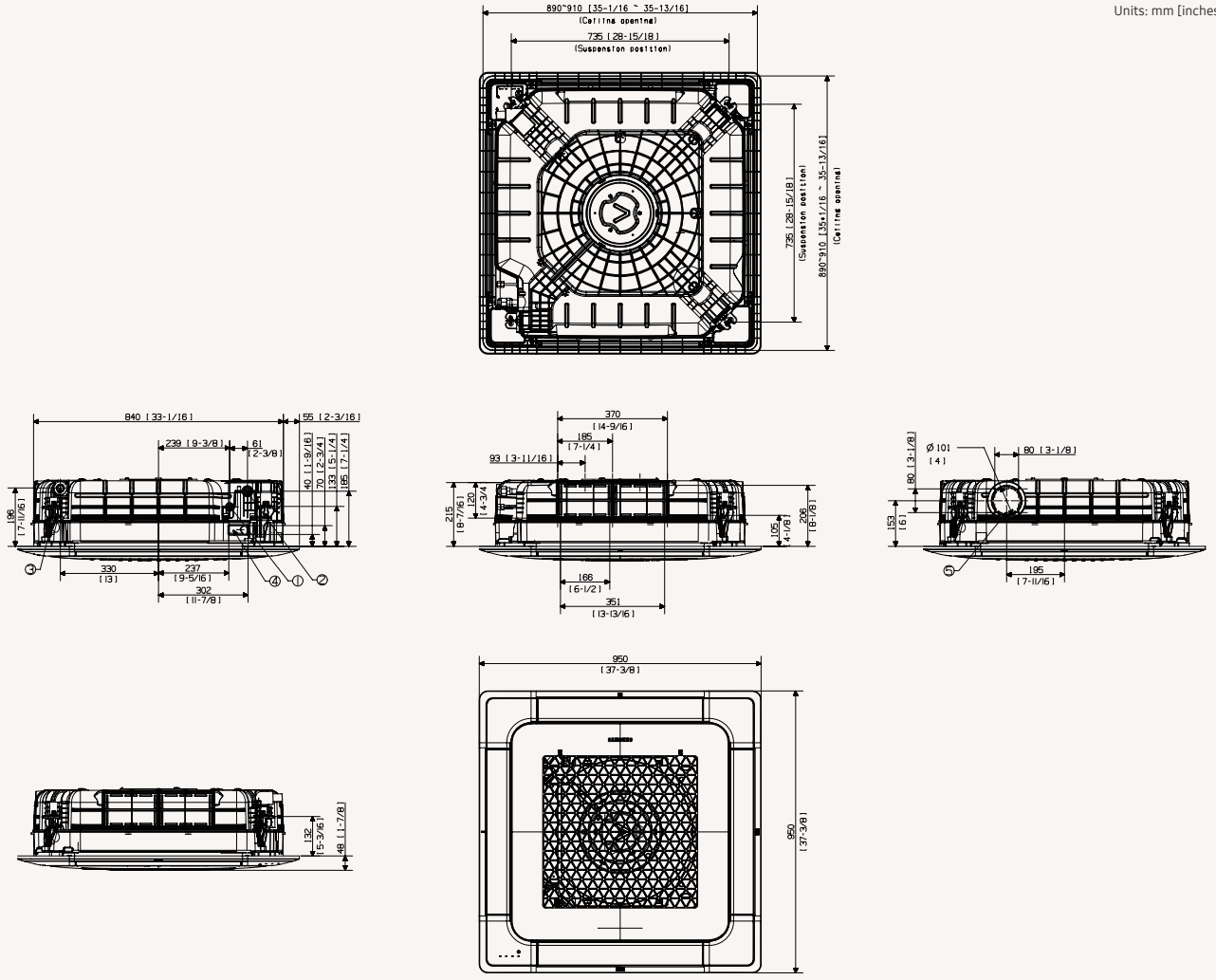

NO	Name	Description	
		AM028/036/045/056AN4PKH/EU	AM071AN4PKH/EU
1	Liquid pipe connection	ø6.35 (1/4)	ø9.52 (3/8)
2	Gas pipe connection	ø12.7 (1/2)	ø15.88 (5/8)
3	Drain pipe connection	VP25 (OD 32, ID 25)	
4	Power supply/communication wiring conduits		
5	Fresh air intake knock-out hole	ø10 [4], use M4 Screw	

Note: As for suspension bolt, please use M8~M10. (Procured at local site)

AM090/112AN4PKH/EU

Units: mm [inches]

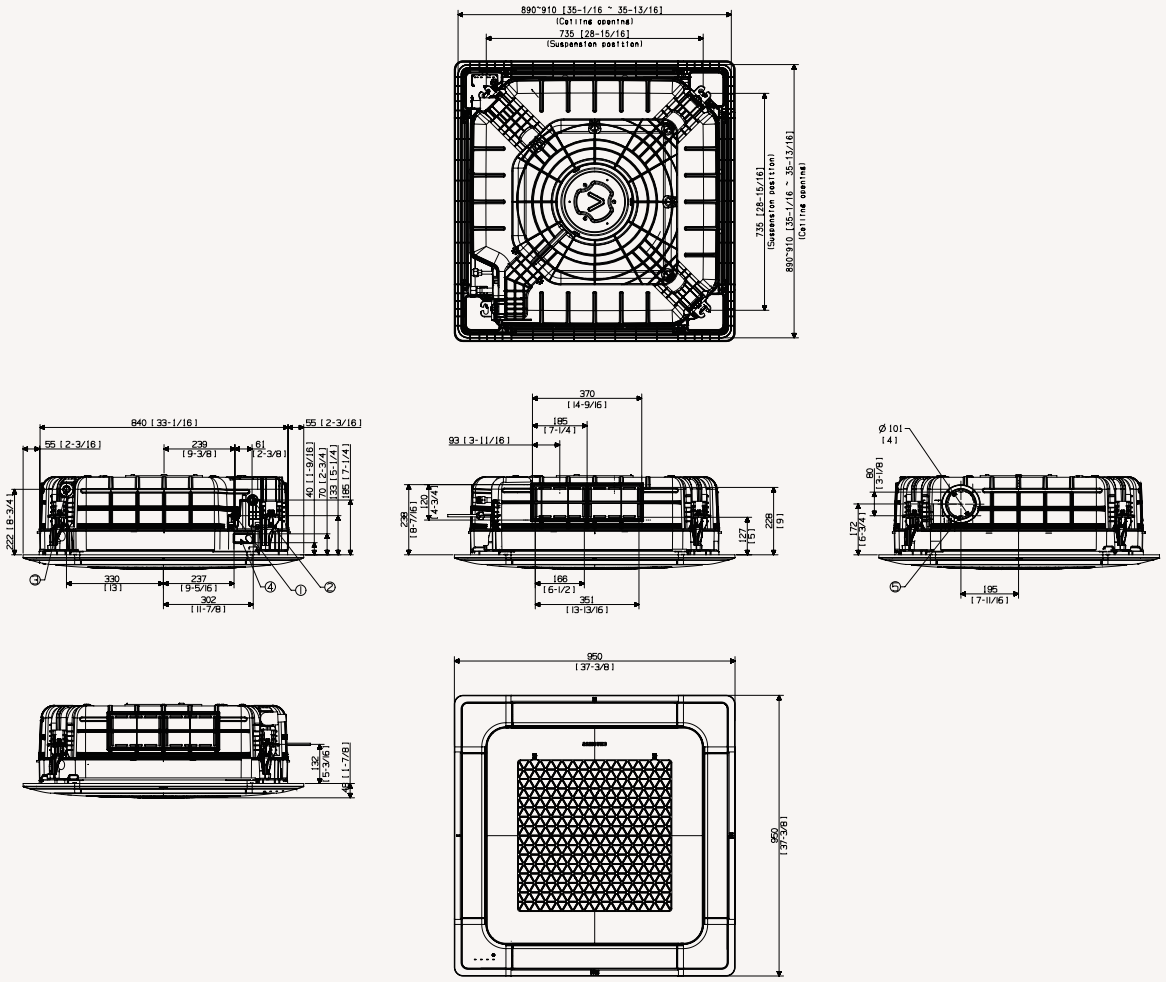

NO	Name	Description
1	Liquid pipe connection	ø9.52 (3/8)
2	Gas pipe connection	ø15.88 (5/8)
3	Drain pipe connection	VP25 (OD 32, ID 25)
4	Power supply/communication wiring conduits	
5	Fresh air intake knock-out hole	ø10 [4], use M4 Screw

Note: As for suspension bolt, please use M8~M10. (Procured at local site)

Technical Drawings

WindFree™ 4-Way Cassette

AM128/140AN4PKH/EU

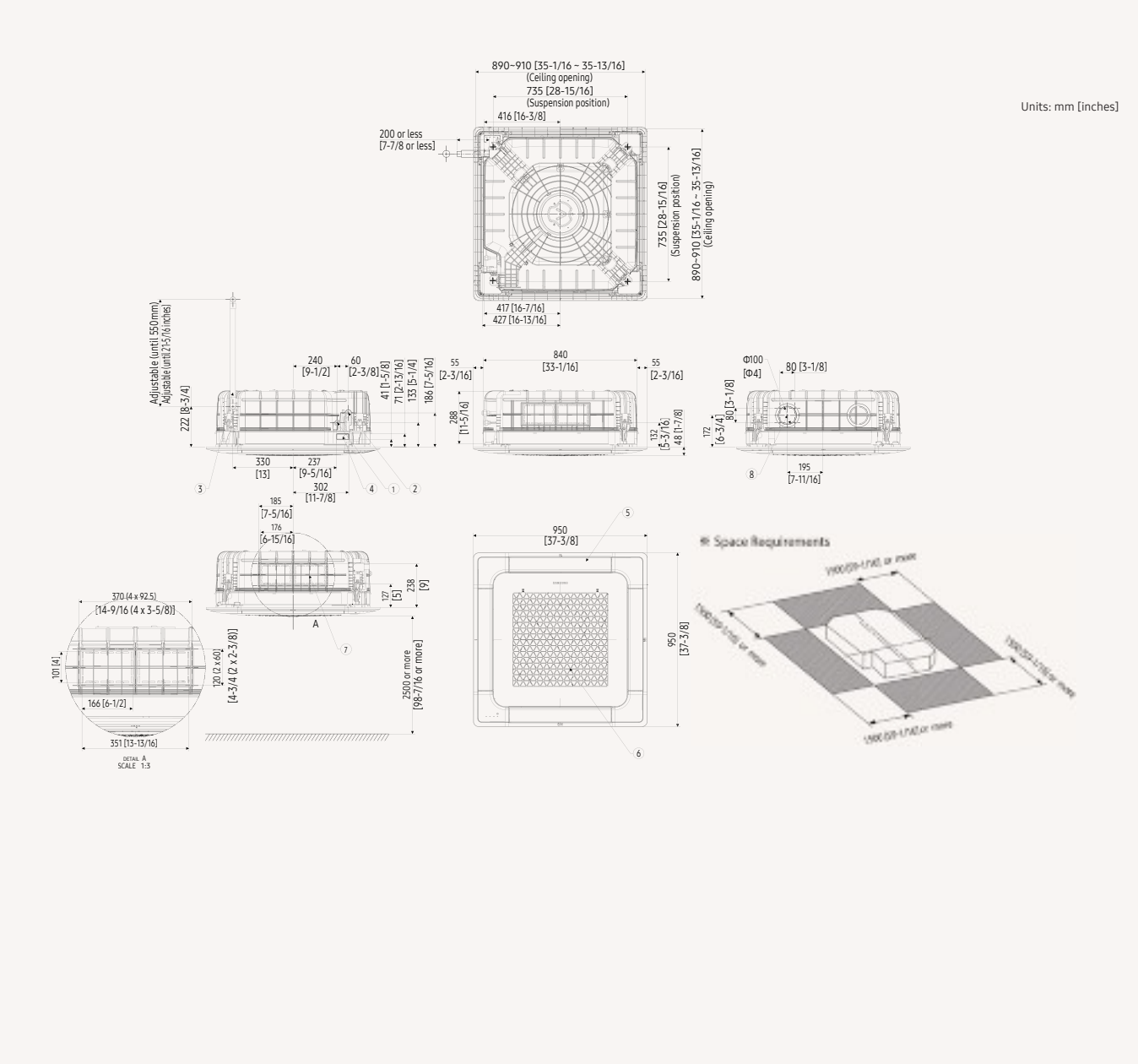

NO	Name	Description
1	Liquid pipe connection	Φ9.52(3/8)
2	Gas pipe connection	Φ15.88(5/8)
3	Drain pipe connection	VP-25(OD32, ID25)
4	Power supply & Communication wiring conduit	-
5	Air inlet grille	-
6	Air outlet louver	-
7	Sub-duct	* The sub duct is not applicable to the WindFree Panel.
8	Fresh air intake knockout hole	Φ10[4], Use M4 Screw

Note: As for suspension bolt, please use M8~M10. (Procured at local site)

Specifications

WindFree™ 1-Way Cassette

- Fast Cooling mode and WindFree™ Cooling mode.
- One-way air supply by means of a 100 mm wide blade.
- Built-in condensation drain pump and humidity sensor.
- Cross-flow fan direct driven by a BLDC motor.
- Can be controlled by Smartphone via Wi-Fi Kit (Optional).
- Optional Air Purification Panel.

Model				AM017NN1PEH/EU	AM022NN1PEH/EU	AM022NN1DKH/EU
Power Supply			Φ, #, V, Hz	1Φ, 2, 220~240 V, 50 Hz	1Φ, 2, 220~240 V, 50 Hz	1Φ, 2, 220~240 V, 50 Hz
Performance	Capacity	Cooling	kW	1.7	2.2	2.2
		Heating	kW	1.9	2.5	2.5
Power	Power Input	Cooling	W	24	25	29
		Heating	w	24	25	29
	Current Input	Cooling	A	0.14	0.15	0.16
		Heating	A	0.14	0.15	0.16
	Current	MCA	A	0.18	0.19	0.20
		MFA	A	15	15	15
Fan	Type		-	Crossflow Fan	Crossflow Fan	Crossflow Fan
	Number of Fans		ea	1	1	1
	Airflow Rate	H/M/L	m³/min	4.80/4.30/4.10	5.10/4.60/4.30	6.00/5.00/4.00
			l/s	80.00/71.67/68.33	85.00/76.67/71.67	100.00/83.33/66.67
Fan Motor	Model		-	BLDC Motor	BLDC Motor	BLDC Motor
	Output x n		W	27 x 1	27 x 1	27 x 1
Piping Connections	Liquid Pipe		ø, mm	6.35	6.35	6.35
			ø, inch	1/4	1/4	1/4
	Gas Pipe		ø, mm	12.7	12.7	12.70
			ø, inch	1/2	1/2	1/2
	Drain Pipe		ø, mm	VP20 (OD 25, ID 20)	VP20 (OD 25, ID 20)	VP20 (OD 25, ID 20)
Wiring Connections	Connection with Indoor	Minimum	mm²	0.75	0.75	0.75
		Remark	-	F1, F2	F1, F2	F1, F2
Refrigerant	Type		-	R410A (Fluorinated greenhouse gas, GWP=2,088)		
	Electronic Expansion Valve		-	EEV INCLUDED	EEV INCLUDED	EEV INCLUDED
Sound	Sound Pressure[1]	(H/M/L)	dB(A)	28/26/24	29/26/24	29/26/24
	Sound Power	Cooling	dB(A)	46	47	47
Dimension	Net Weight		kg	8.0	8.0	10.0
	Net Dimensions (W x H x D)		mm	740 x 135 x 360	740 x 135 x 360	970 x 135 x 410
Panel	Model Name		-	PC1MWFMAN	PC1MWFMAN	PC1NWFMAN
Drain pump			-	INCLUDED	INCLUDED	INCLUDED
	Max. Lifting Height/Displacement		mm / litres/h	750/24	750/24	750/24

Accessories

Wireless Remote Controller	Simple Type Controller	Touch Controller	Wired Remote Controller	Wi-Fi Kit	Panel (Mandatory)
AR-EH03E	MWR-SH00N	MWR-SH11N	MWR-WG00*N	MIM-H04EN	PC1*WFMAN

Air Purification Panel (Optional)	External Room Sensor
PC1*WCMAN	MRW-TA

[1] Sound pressure level is obtained in an anechoic room. Sound pressure level is a relative value, depending on the distance and acoustic environment. Sound pressure level may differ depending on operation conditions.

AM028NN1DKH/EU	AM036NN1DKH/EU	AM056NN1DEH/EU	AM071NN1DEH/EU
1Φ, 2, 220~240 V, 50 Hz	1Φ, 2, 220~240 V, 50 Hz	1Φ, 2, 220~240 V, 50 Hz	1Φ, 2, 220~240 V, 50 Hz
2.8	3.6	5.6	7.1
3.2	4.0	6.3	8.0
32	40	55	80
32	40	55	80
0.17	0.20	0.28	0.40
0.17	0.20	0.28	0.40
0.21	0.25	0.35	0.50
15	15	15	15
Crossflow Fan	Crossflow Fan	Crossflow Fan	Crossflow Fan
1	1	1	1
7.00/6.00/5.00	8.00/7.00/6.00	16.00/14.00/12.50	17.00/15.50/14.00
116.67/100.00/83.33	133.33/116.67/100.00	266.67/233.33/208.33	283.33/258.33/233.33
BLDC Motor	BLDC Motor	BLDC Motor	BLDC Motor
27 x 1	27 x 1	54 x 1	54 x 1
6.35	6.35	6.35	9.52
1/4	1/4	1/4	3/8
12.70	12.70	12.7	15.88
1/2	1/2	1/2	5/8
VP20 (OD 25, ID 20)	VP20 (OD 25, ID 20)	VP20 (OD 25, ID 20)	VP20 (OD 25, ID 20)
0.75	0.75	0.75	0.75
F1, F2	F1, F2	F1, F2	F1, F2
R410A (Fluorinated greenhouse gas, GWP=2,088)			
EEV INCLUDED	EEV INCLUDED	EEV INCLUDED	EEV INCLUDED
32/28/24	37/33/30	41/38/35	42/39/36
50	55	59	60
10.0	10.0	13.5	13.5
970 x 135 x 410	970 x 135 x 410	1,200 x 138 x 450	1,200 x 138 x 450
PC1NWFMAN	PC1NWFMAN	PC1BWFMAN	PC1BWFMAN
INCLUDED	INCLUDED	INCLUDED	INCLUDED
750/24	750/24	750/24	750/24

Dimensional drawings

WindFree™ 1-Way Cassette

AM017/022NN1PEH/EU

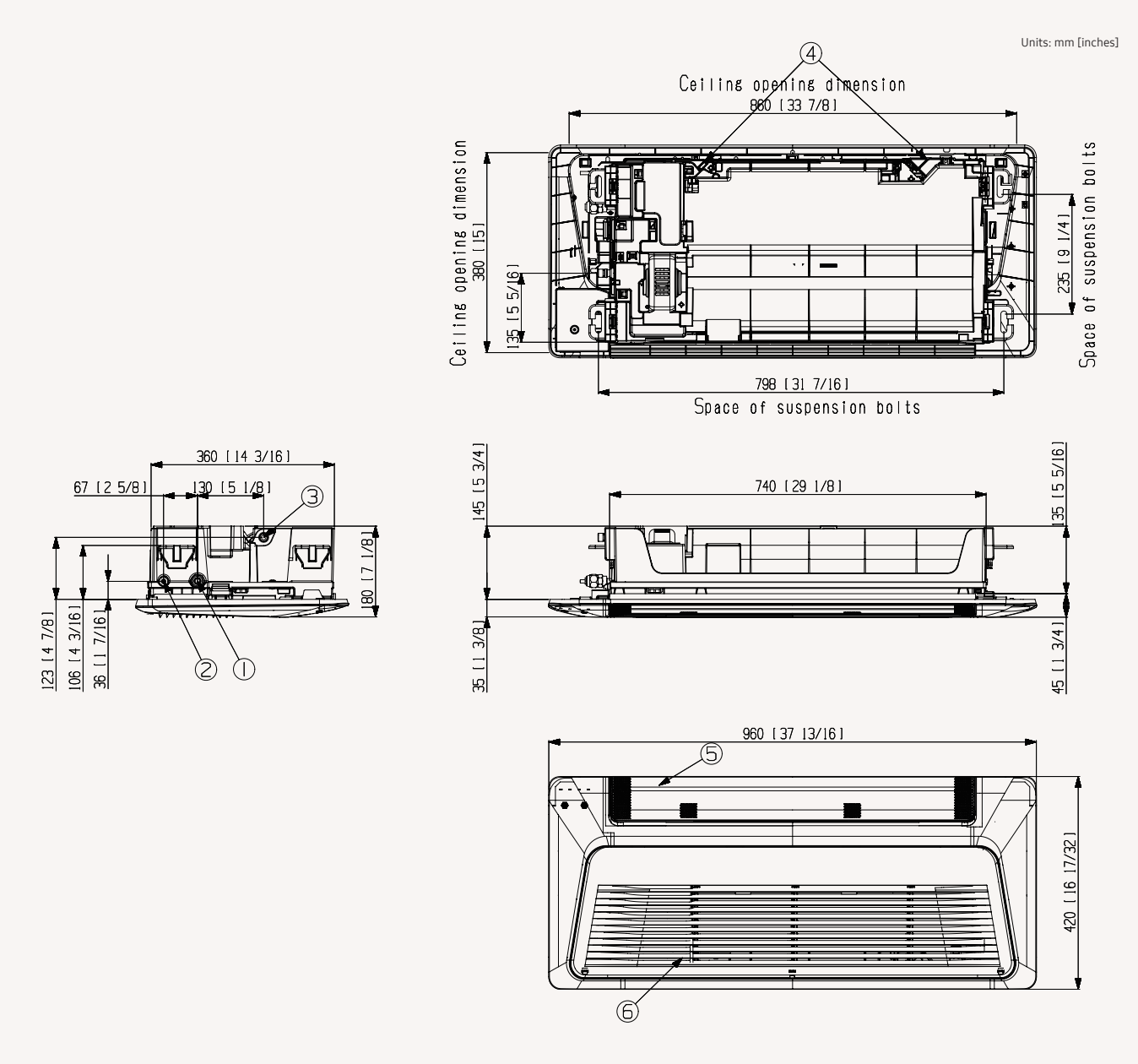

NO	Name	Description
1	Gas pipe connection	Ø12.7 (1/2")
2	Liquid pipe connection	Ø6.35 (1/4")
3	Drain hose connection	VP20 (OD26, ID20)
4	Power supply/Communication wiring conduit	-
5	Air outlet louver	-
6	Air inlet grille	-

AM022/028/036NN1DKH/EU

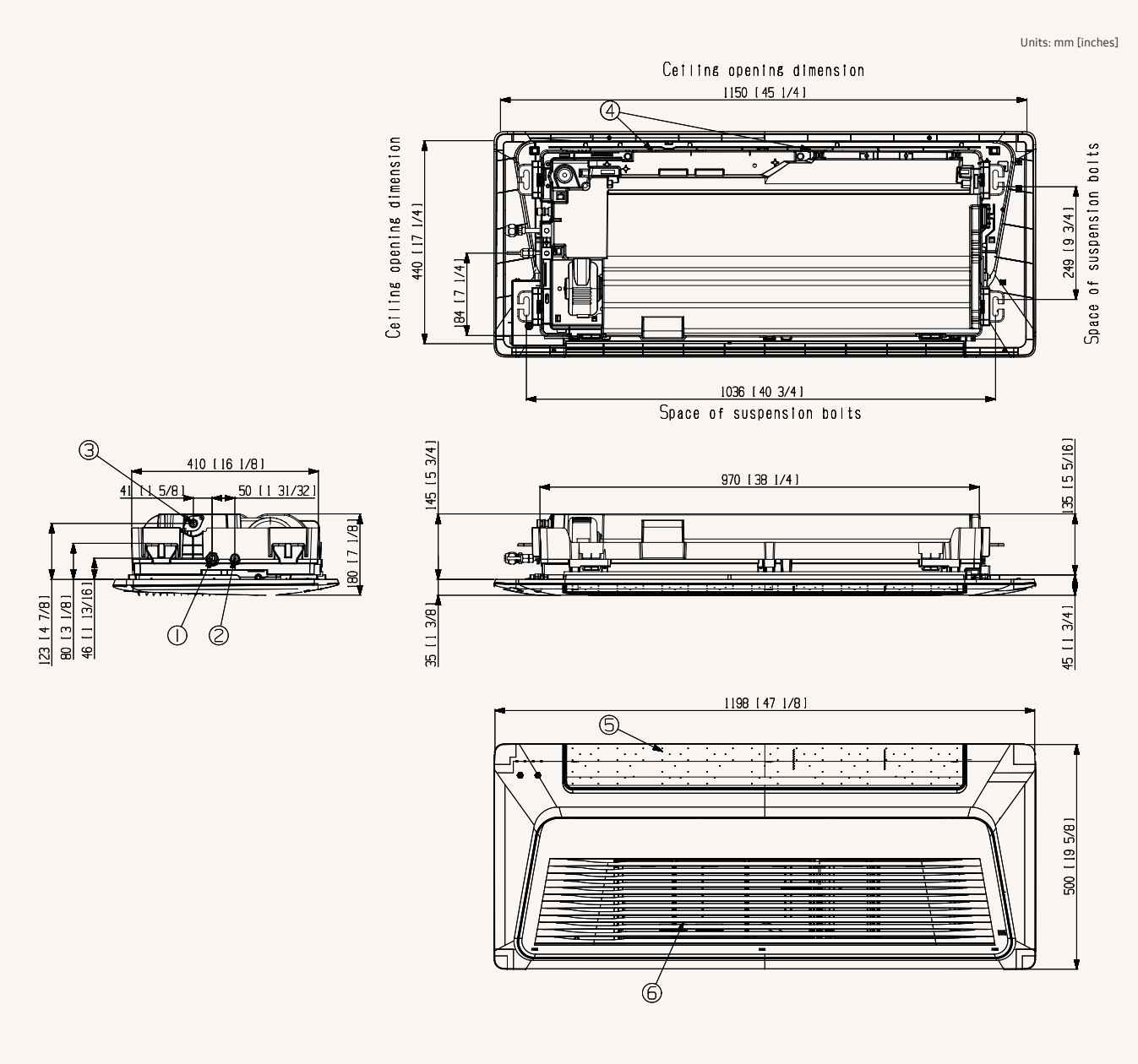

NO	Name	Description
1	Gas pipe connection	Ø12.7 (1/2")
2	Liquid pipe connection	Ø6.35 (1/4")
3	Drain hose connection	VP20 (OD26, ID20)
4	Power supply/Communication wiring conduit	-
5	Air outlet louver	-
6	Air inlet grille	-

Dimensional drawings

WindFree™ 1-Way Cassette

AM056/071NN1DEH/EU

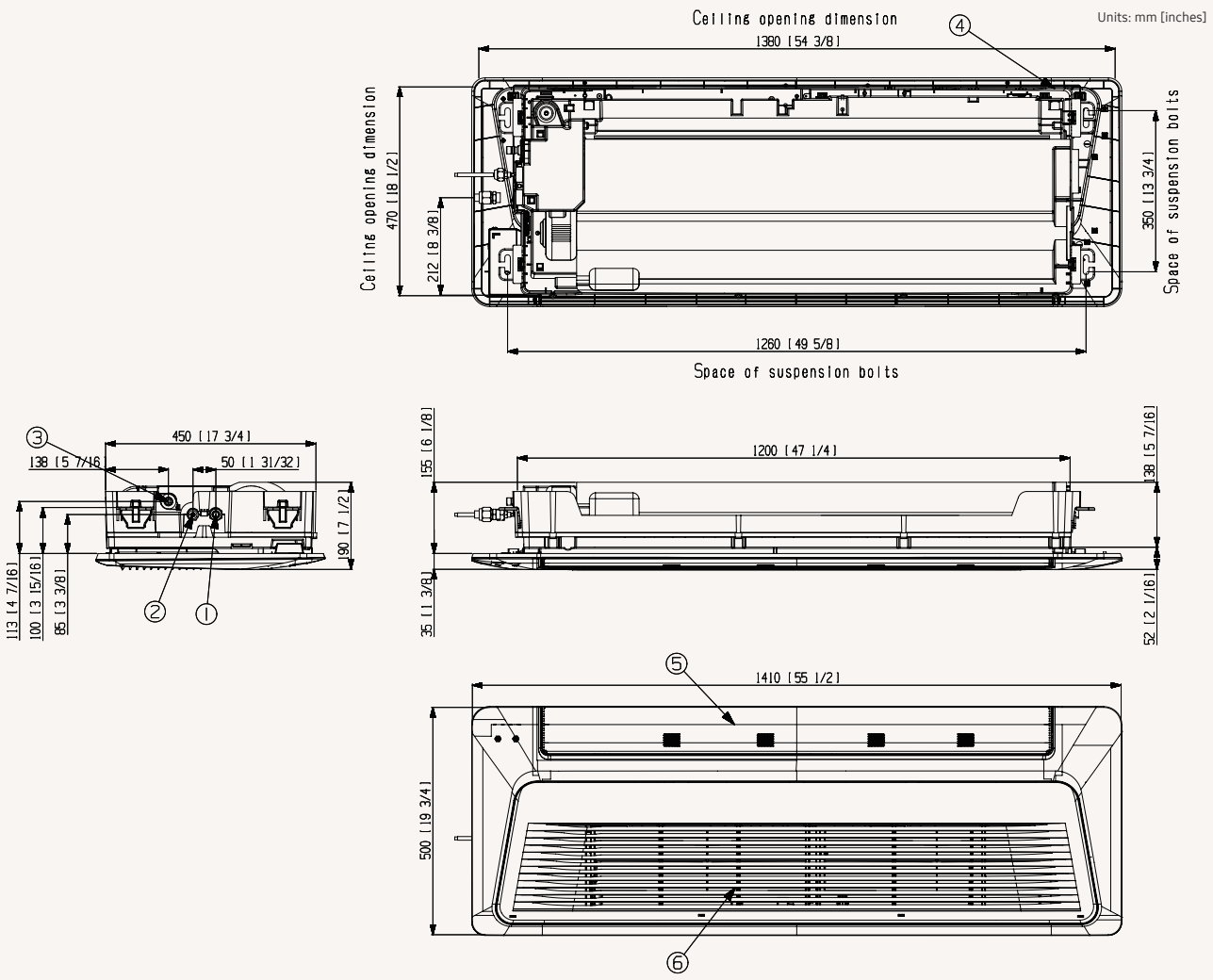

NO	Name	Description	
		5.2 kW	7.1 kW
1	Gas pipe connection	Ø12.70 (1/2")	Ø15.88 (5/8")
2	Liquid pipe connection	Ø6.35 (1/4")	Ø9.52 (3/8")
3	Drain hose connection	VP25 (OD32, ID25)	
4	Power supply/Communication wiring conduit	-	
5	Air outlet louver	-	
6	Air inlet grille	-	

SAMSUNG

Specifications

VRF

360 Cassette

- 360 degree air supply.
- Bladeless discharge. Booster fans can be individually controlled, allowing for completely horizontal flow discharge. Coandă effect is created even without ceiling.
- The PM 1.0 panel is an optional accessory for square and circle panel.
- Auto elevation panel is an optional accessory available in both the circle and square panel.
- Built-in condensation drain pump.
- Predisposition of the air inlet to let fresh air in.
- Can be controlled by Smartphone via Wi-Fi Kit (Optional).
- Circular or square cassette panel. Available in white and black.
- Motion Detector Sensor is optional for square cassette panel.

Model				AM045KN4DEH/EU	AM056KN4DEH/EU	AM071KN4DEH/EU
Power Supply			Φ, #, V, Hz	1Φ, 2, 220~240 V, 50 Hz	1Φ, 2, 220~240 V, 50 Hz	1Φ, 2, 220~240 V, 50 Hz
Performance	Capacity (Nominal)	Cooling	kW	4.5	5.6	7.1
		Heating	kW	5.0	6.3	8.0
Power	Power Input (Nominal)	Cooling	W	26	30	34
		Heating	W	26	30	34
	Current Input (Nominal)	Cooling	A	0.18	0.21	0.25
		Heating	A	0.18	0.21	0.25
Fan	Motor	Type	-	Turbo Fan	Turbo Fan	Turbo Fan
		Output x n	w	65 x 1	65 x 1	65 x 1
	Airflow Rate	H/M/L (UL)	m³/min	14.50/13.50/12.50	16.00/14.50/13.50	18.00/16.00/14.00
			l/s	241.67/225.00/208.33	266.67/241.67/225.00	300.00/266.67/233.33
Piping Connections	Liquid Pipe		ø, mm	6.35	6.35	9.52
			ø, inch	1/4	1/4	3/8
	Gas Pipe		ø, mm	12.70	12.70	15.88
			ø, inch	1/2	1/2	5/8
	Drain Pipe		ø, mm	VP25 (OD 32, ID 25)	VP25 (OD 32, ID 25)	VP25 (OD 32, ID 25)
Field Wiring	Power Source Wire		mm²	1.5~2.5	1.5~2.5	1.5~2.5
	Transmission Cable		mm²	0.75~1.50	0.75~1.50	0.75~1.50
Refrigerant	Type		-	R410A (Fluorinated greenhouse gas, GWP=2,088)		
	Control Method		-	EEV INCLUDED	EEV INCLUDED	EEV INCLUDED
Sound	Sound Pressure[1]	(H/M/L)	dB(A)	33/31/29	34/32/29	36/33/30
	Sound Power	Cooling	dB(A)	50	51	53
Dimension	Net Weight		kg	21.0	21.0	21.0
	Net Dimensions (W x H x D)		mm	947 x 281 x 947	947 x 281 x 947	947 x 281 x 947
Panel	Model Name		-	PC4NUDMAN	PC4NUDMAN	PC4NUDMAN

Accessories

Wireless Remote Controller	Simple Type Controller	Touch Controller	Wired Remote Controller	Wi-Fi Kit	External Room Sensor
AR-KH03E	MWR-SH00N	MWR-SH11N	MWR-WG00*N	MIM-H04EN	MRW-TA
Panel (Mandatory)	Panel (Mandatory)	Panel (Mandatory)	Panel (Mandatory)	Air Purification Panel (Optional)	Auto Elevation Panel (Optional)
PC4NUDMAN	PC4NUNMAN	PC4NBDMAN	PC4NBNMAN	PC6EUCMAN	PC6EUXMAN
Motion Detect Sensor for PC4NUDMAN					
MCR-SME					

[1] Sound pressure level is obtained in an anechoic room. Sound pressure level is a relative value, depending on the distance and acoustic environment. Sound pressure level may differ depending on operation conditions.

AM090KN4DEH/EU	AM112KN4DEH/EU	AM128KN4DEH/EU	AM140KN4DEH/EU
1Φ, 2, 220~240 V, 50 Hz	1Φ, 2, 220~240 V, 50 Hz	1Φ, 2, 220~240 V, 50 Hz	1Φ, 2, 220~240 V, 50 Hz
9.0	11.2	12.8	14.0
10.0	12.5	13.8	16.0
55	53	77	91
55	53	77	91
0.42	0.41	0.62	0.75
0.42	0.41	0.62	0.75
Turbo Fan	Turbo Fan	Turbo Fan	Turbo Fan
65 x 1	97 x 1	97 x 1	97 x 1
22.00/18.50/16.00	25.50/21.00/17.50	29.50/24.00/19.00	31.50/26.50/21.00
366.67/308.33/266.67	425.00/350.00/291.67	491.67/400.00/316.67	525.00/441.67/350.00
9.52	9.52	9.52	9.52
3/8	3/8	3/8	3/8
15.88	15.88	15.88	15.88
5/8	5/8	5/8	5/8
VP25 (OD 32, ID 25)	VP25 (OD 32, ID 25)	VP25 (OD 32, ID 25)	VP25 (OD 32, ID 25)
1.5~2.5	1.5~2.5	1.5~2.5	1.5~2.5
0.75~1.50	0.75~1.50	0.75~1.50	0.75~1.50
R410A (Fluorinated greenhouse gas, GWP=2,088)			
EEV INCLUDED	EEV INCLUDED	EEV INCLUDED	EEV INCLUDED
40/36/32	40/36/32	42/38/33	44/40/35
57	58	60	61
21.0	24.0	24.0	24.0
947 x 281 x 947	947 x 365 x 947	947 x 365 x 947	947 x 365 x 947
PC4NUDMAN	PC4NUDMAN	PC4NUDMAN	PC4NUDMAN

Dimensional drawings

360 Cassette (square)

AM045KN4DEH/EU, AM056KN4DEH/EU, AM071KN4DEH/EU, AM090KN4DEH/EU

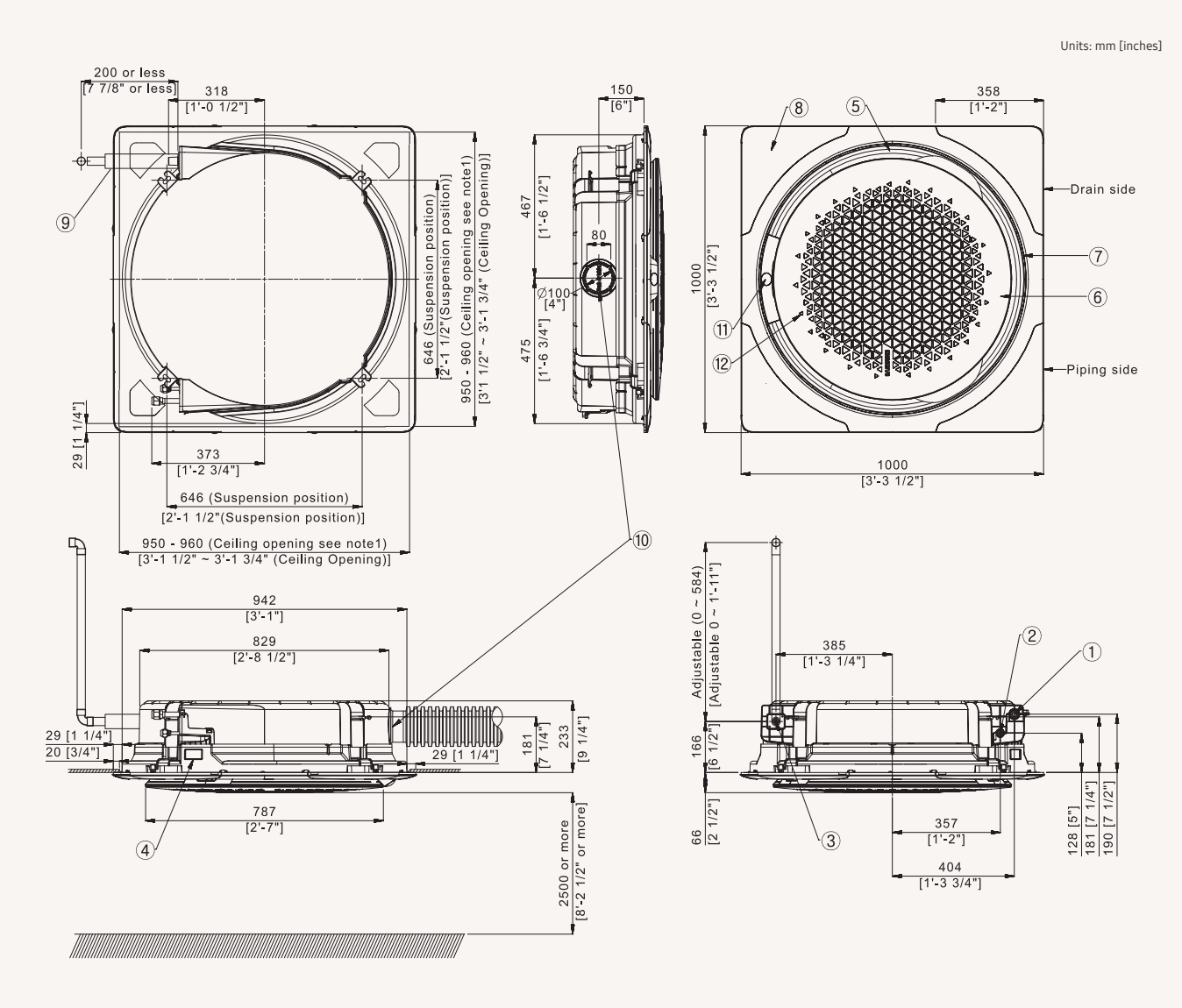

NO	Name
1	Refrigerant liquid pipe
2	Refrigerant gas pipe
3	Condensate drain
4	Power supply/communication wiring conduits
5	Air discharge opening
6	Air suction grille
7	Suction rim for booster fan
8	Corner decoration cover
9	Drain hose
10	Fresh air intake knock-out hole
11	Display window
12	Infrared receiver

1. Make sure the spacing between the ceiling and the cassette is no more than 29 mm [1 1/4"].
   Max ceiling opening: 960 mm [3'1 3/4"]
2. When the conditions exceed 30 °C and RH 80 % in the ceiling or fresh air inducted into the ceiling, additional insulation is required (polythene foam, thickness 10 mm [3/8"] or more)
3. Open type panel model code: PC4NUDMAN

AM112KN4DEH/EU, AM128KN4DEH/EU AM140KN4DEH/EU

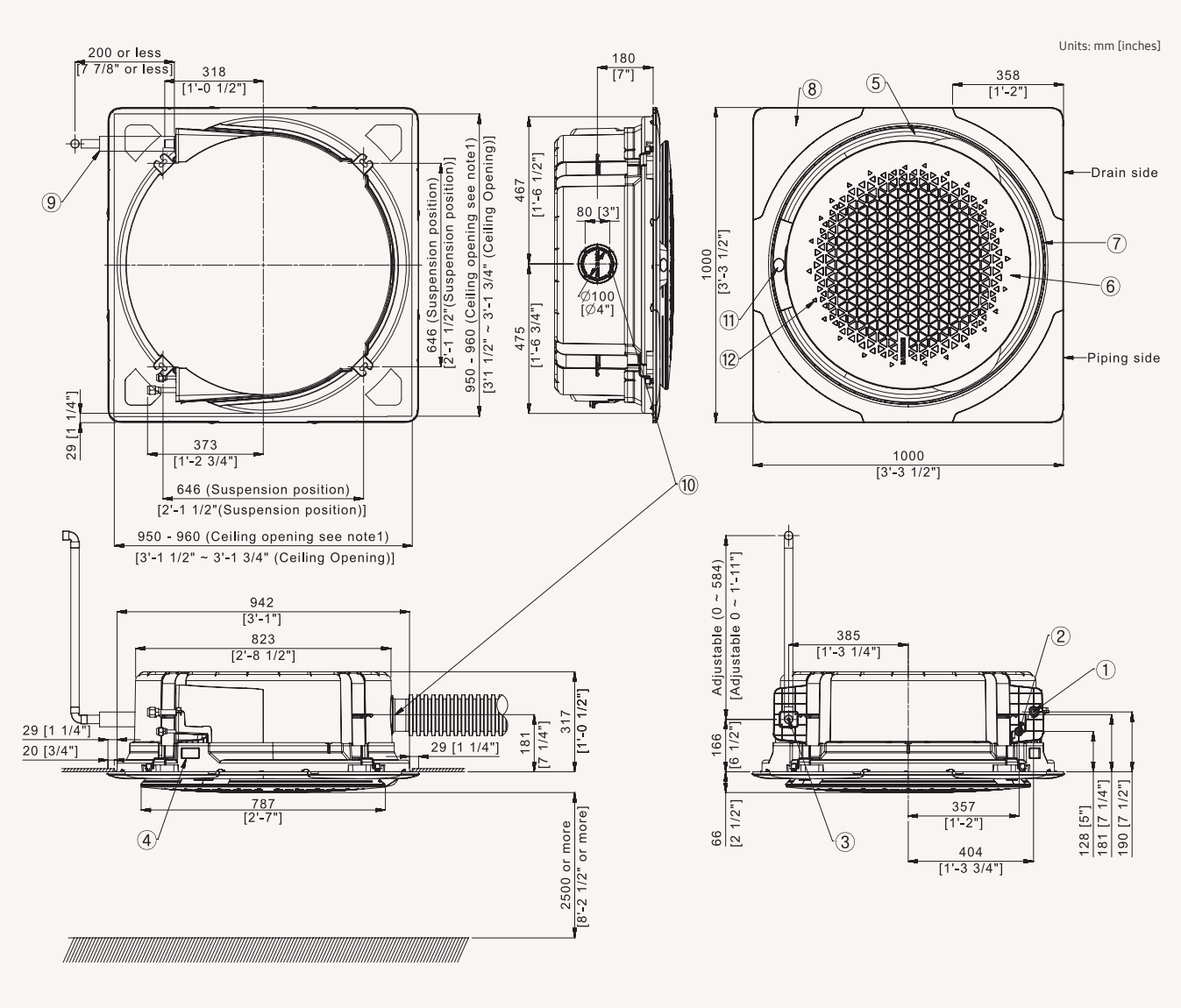

NO	Name
1	Refrigerant liquid pipe
2	Refrigerant gas pipe
3	Condensate drain
4	Power supply/communication wiring conduits
5	Air discharge opening
6	Air suction grille
7	Suction rim for booster fan
8	Corner decoration cover
9	Drain hose
10	Fresh air intake knock-out hole
11	Display window
12	Infrared receiver

1. Make sure the spacing between the ceiling and the cassette is no more than 29 mm [1 1/4"].
   Max ceiling opening: 960 mm [3'1 3/4"]
2. When the conditions exceed 30 °C and RH 80 % in the ceiling or fresh air inducted into the ceiling, additional insulation is required (polythene foam, thickness 10 mm [3/8"] or more)
3. Open type panel model code: PC4NUDMAN

Dimensional drawings

360 Cassette (circular)

AM045KN4DEH/EU, AM056KN4DEH/EU, AM071KN4DEH/EU, AM090KN4DEH/EU

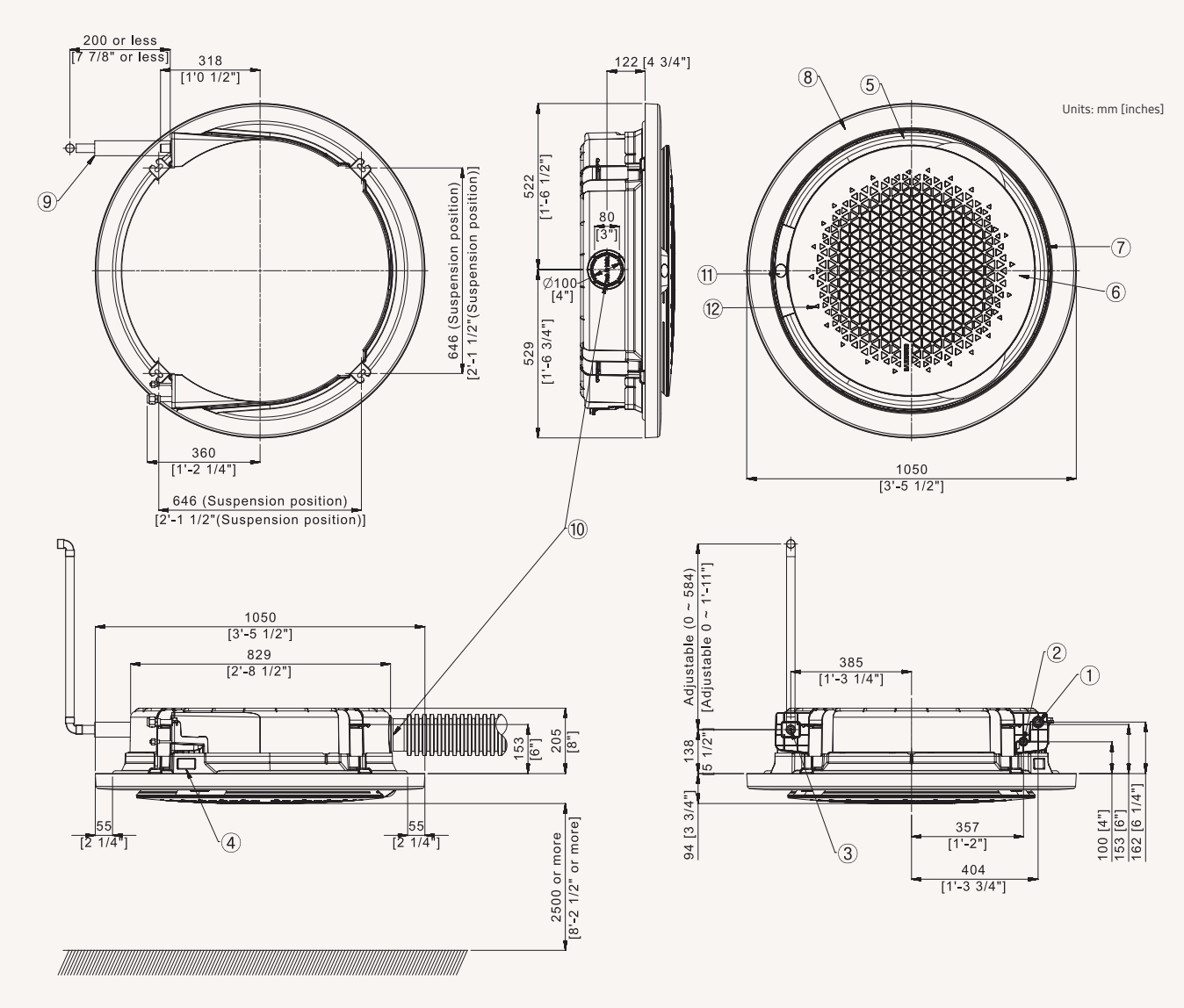

NO	Name
1	Refrigerant liquid pipe
2	Refrigerant gas pipe
3	Condensate drain
4	Power supply/communication wiring conduits
5	Air discharge opening
6	Air suction grille
7	Suction rim for booster fan
8	Corner decoration cover
9	Drain hose
10	Fresh air intake knock-out hole
11	Display window
12	Infrared receiver

Category	Inspection hole		
	Recessed installation		Exposed installation
	Integrated	Suspended	
Square Panel	1 ea	-	
Circle Panel	2 ea		

1. Make sure the spacing between the ceiling and the cassette is no more than 10 mm [3/8"].
2. When the conditions exceed 30 °C and RH 80 % in the ceiling or fresh air inducted into the ceiling, additional insulation is required (polythene foam, thickness 10 mm [3/8"] or more)
3. Open type panel model code: PC4NUNMAN
4. The circular panel is available by default in the exposed installation.
5. Make inspection holes on the ceiling for easier installation and maintenance, as shown in the following table. (An inspection hole must be at least 450 mm x 450 mm in size.)
6. A suspended ceiling structure can substitute for the inspection holes.

AM112KN4DEH/EU, AM128KN4DEH/EU, AM140KN4DEH/EU

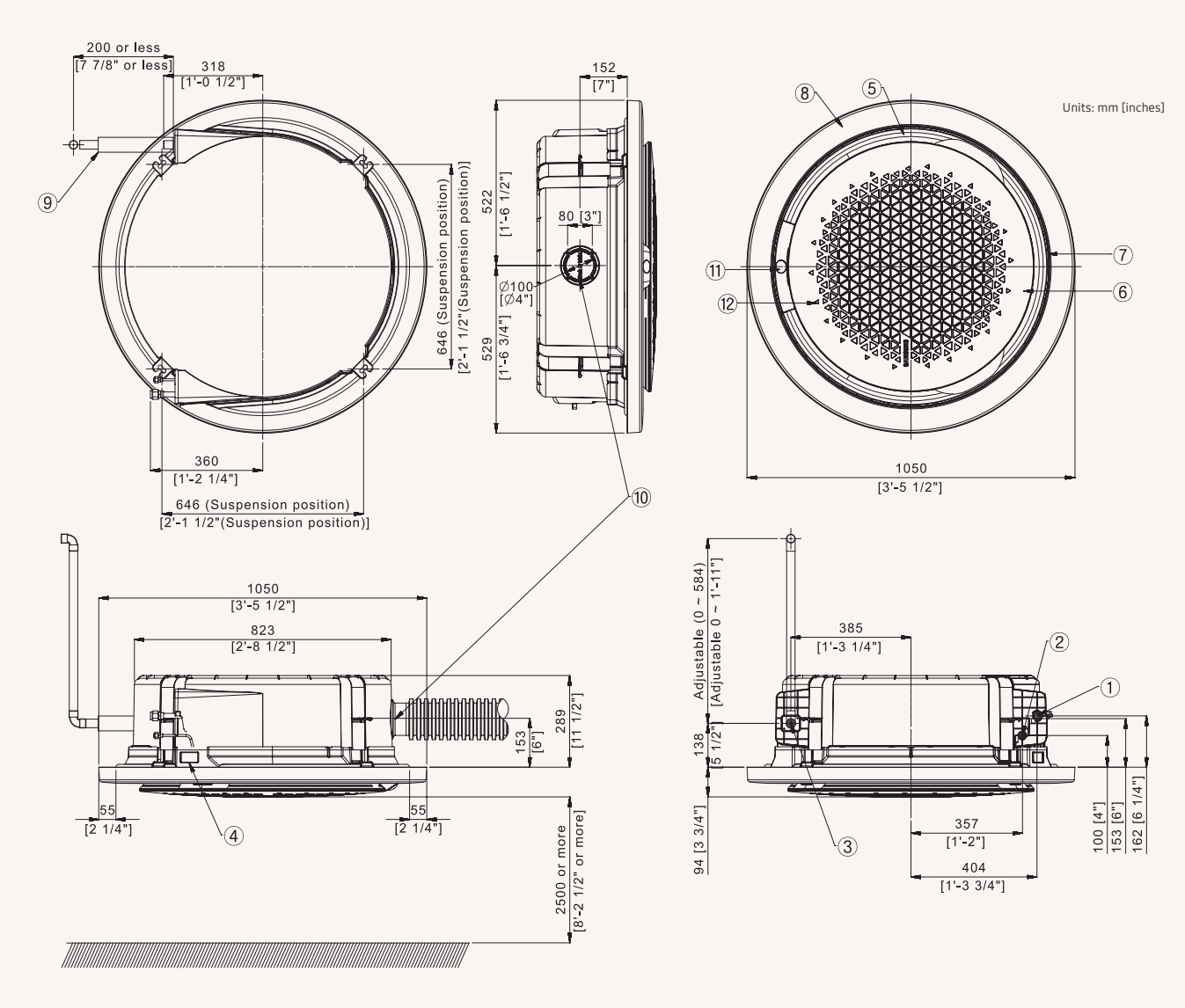

NO	Name
1	Refrigerant liquid pipe
2	Refrigerant gas pipe
3	Condensate drain
4	Power supply/communication wiring conduits
5	Air discharge opening
6	Air suction grille
7	Suction rim for booster fan
8	Corner decoration cover
9	Drain hose
10	Fresh air intake knock-out hole
11	Display window
12	Infrared receiver

Category	Inspection hole		
	Recessed installation		Exposed installation
	Integrated	Suspended	
Square Panel	1 ea	-	
Circle Panel	2 ea		

1. Make sure the spacing between the ceiling and the cassette is no more than 10 mm [3/8"].
2. When the conditions exceed 30 °C and RH 80 % in the ceiling or fresh air inducted into the ceiling, additional insulation is required (polythene foam, thickness 10 mm [3/8"] or more)
3. Open type panel model code: PC4NUNMAN
4. The circular panel is available by default in the exposed installation.
5. Make inspection holes on the ceiling for easier installation and maintenance, as shown in the following table. (An inspection hole must be at least 450 mm x 450 mm in size.)
6. A suspended ceiling structure can substitute for the inspection holes.

VECO

Specifications

VRF

LSP Duct (drain pump excluded)

- Two-position field adjustable air return, on the bottom or at the rear of the unit.
- Equipped with one Sirocco fan direct driven by a single motor.
- Long-life washable HD 40 permanent filter is included.
- Auto Restart function.
- Can be controlled by Smartphone via Wi-Fi Kit (Optional).

Model				AM017ANLDKH/EU	AM022ANLDKH/EU	AM028ANLDKH/EU	AM036ANLDKH/EU
Power Supply			Φ, #, V, Hz	1Φ, 2, 220~240 V, 50/60 Hz	1Φ, 2, 220~240 V, 50/60 Hz	1Φ, 2, 220~240 V, 50/60 Hz	1Φ, 2, 220~240 V, 50/60 Hz
Performance	Capacity (Nominal)	Cooling	kW	1.7	2.2	2.8	3.6
		Heating	kW	1.9	2.5	3.2	4.0
Power	Power Input (Nominal)	Cooling	W	28	30	34	40
		Heating	W	28	30	36	42
	Current Input (Nominal)	Cooling	A	0.23	0.25	0.28	0.33
		Heating	A	0.23	0.25	0.30	0.35
Fan	Type		-	Sirocco Fan	Sirocco Fan	Sirocco Fan	Sirocco Fan
	Motor	Output x n	W	69 x 1	69 x 1	69 x 1	69 x 1
	Airflow Rate	H/M/L (UL)	m³/min	5.5 / 4.5 / 3.8	6.0 / 4.9 / 3.8	7.1 / 5.2 / 4.4	8.2 / 6.5 / 4.9
			l/s	91 / 74 / 63	100 / 82 / 63	118 / 86 / 73	137/ 108 / 82
	External Static Pressure	Min/Std/Max	mmAq	0.0 / 1.0 / 3.0	0.0 / 1.0 / 3.0	0.0 / 1.0 / 3.0	0.0 / 1.0 / 3.0
			Pa	0.00/9.81/29.42	0.00/9.81/29.42	0.00/9.81/29.42	0.00/9.81/29.42
Piping Connections	Liquid Pipe		ø, mm	6.35	6.35	6.35	6.35
			ø, inch	1/4	1/4	1/4	1/4
	Gas Pipe		ø, mm	12.70	12.70	12.70	12.70
			ø, inch	1/2	1/2	1/2	1/2
	Drain Pipe		ø, mm	VP25 (OD 32, ID 25)	VP25 (OD 32, ID 25)	VP25 (OD 32, ID 25)	VP25 (OD 32, ID 25)
Field Wiring	Power Source Wire	Below 20 m/over 20 m	mm²	1.5/2.5	1.5/2.5	1.5/2.5	1.5/2.5
	Transmission Cable		mm²	0.75~1.50	0.75~1.50	0.75~1.50	0.75~1.50
Refrigerant	Type		-	R410A (Fluorinated greenhouse gas, GWP=2,088)			
	Control Method		-	EEV INCLUDED	EEV INCLUDED	EEV INCLUDED	EEV INCLUDED
Sound	Sound Pressure[1]	(H/M/L)	dB(A)	25 / 22 / 19	26 / 23 / 19	28 / 24 / 19	31 / 26 / 20
	Sound Power		dB(A)	40	42	44	46
Dimensions	Net Weight		kg	14.9	14.9	14.9	15.3
	Net Dimensions (W x H x D)		mm	700 x 199 x 440	700 x 199 x 440	700 x 199 x 440	700 x 199 x 440
Air Filter			-	Long-life Filter	Long-life Filter	Long-life Filter	Long-life Filter

Accessories					
Wireless Remote Controller	Touch Controller	Wired Remote Controller	Wi-Fi Kit	Wireless Receiver Kit	External Room Sensor
AR-EH03E (to be matched with MRK-A10N)	MWR-SH11N	MWR-WG00*N	MIM-H04EN	MRK-A10N (to be matched with AR-EH03E)	MRW-TA

[1] Sound pressure level is obtained in an anechoic room. Sound pressure level is a relative value, depending on the distance and acoustic environment. Sound pressure level may differ depending on operation conditions.

AM045ANLDKH/EU	AM056ANLDKH/EU	AM071ANLDKH/EU	AM090ANLDKH/EU	AM112ANLDKH/EU	AM128ANLDKH/EU	AM140ANLDKH/EU
1Φ, 2, 220~240 V, 50/60 Hz	1Φ, 2, 220~240 V, 50/60 Hz	1Φ, 2, 220~240 V, 50/60 Hz	1Φ, 2, 220~240 V, 50/60 Hz	1Φ, 2, 220~240 V, 50/60 Hz	1Φ, 2, 220~240 V, 50/60 Hz	1Φ, 2, 220~240 V, 50/60 Hz
4.5	5.6	7.1	9.0	11.2	12.8	14.0
5.0	6.3	8.0	10.0	12.5	13.8	16.0
51	73	82	170	170	200	220
46	68	77	170	170	200	220
0.45	0.62	0.69	0.96	0.96	1.28	1.43
0.41	0.58	0.65	0.96	0.96	1.28	1.43
Sirocco Fan	Sirocco Fan	Sirocco Fan	Sirocco Fan	Sirocco Fan	Sirocco Fan	Sirocco Fan
84 x 1	84 x 1	84 x 1	183 x 1	183 x 1	183 x 1	183 x 1
12.5 / 10.0 / 7.5	15.5 / 12.5 / 9.5	18.0 / 14.5 / 11.0	29.0 / 27.0 / 25.0	31.0 / 29.0 / 27.0	34.0 / 32.0 / 30.0	36.0 / 34.0 / 32.0
208/ 167 / 125	258/ 208 / 158	300/ 242 / 183	483/ 450 / 417	520/483/450	567/533/500	600/567/533
0.0 / 2.0 / 4.0	0.0 / 2.0 / 4.0	0.0 / 2.0 / 4.0	0.0 / 3.0 / 6.0	0.0 / 3.0 / 6.0	0.0 / 3.0 / 6.0	0.0 / 3.0 / 6.0
0.00/19.61/39.23	0.00/19.61/39.23	0.00/19.61/39.23	0.00/29.42/58.84	0.00/29.42/58.84	0.00/29.42/58.84	0.00/29.42/58.84
6.35	6.35	9.52	9.52	9.52	9.52	9.52
1/4	1/4	3/8	3/8	3/8	3/8	3/8
12.70	12.70	15.88	15.88	15.88	15.88	15.88
1/2	1/2	5/8	5/8	5/8	5/8	5/8
VP25 (OD 32, ID 25)	VP25 (OD 32, ID 25)	VP25 (OD 32, ID 25)	VP25 (OD 32, ID 25)	VP25 (OD 32, ID 25)	VP25 (OD 32, ID 25)	VP25 (OD 32, ID 25)
1.5/2.5	1.5/2.5	1.5/2.5	1.5/2.5	1.5/2.5	1.5/2.5	1.5/2.5
0.75~1.50	0.75~1.50	0.75~1.50	0.75~1.50	0.75~1.50	0.75~1.50	0.75~1.50
R410A (Fluorinated greenhouse gas, GWP=2,088)						
EEV INCLUDED	EEV INCLUDED	EEV INCLUDED	EEV INCLUDED	EEV INCLUDED	EEV INCLUDED	EEV INCLUDED
32 / 28 / 25	34 / 30 / 26	34 / 30 / 27	37 / 36 / 34	37 / 36 / 34	37 / 36 / 34	39 / 38 / 36
47	49	49	66	66	66	68
18.8	18.8	22.0	40.0	40.0	41.5	41.5
700 x 199 x 440	900 x 199 x 440	1,100 x 199 x 440	1,300 x 295 x 690	1,300 x 295 x 690	1,300 x 295 x 690	1,300 x 295 x 690
Long-life Filter	Long-life Filter	Long-life Filter	Long-life Filter	Long-life Filter	Long-life Filter	Long-life Filter

Dimensional drawings

LSP Duct (drain pump excluded)

AM017/022/028/036ANLDKH/EU

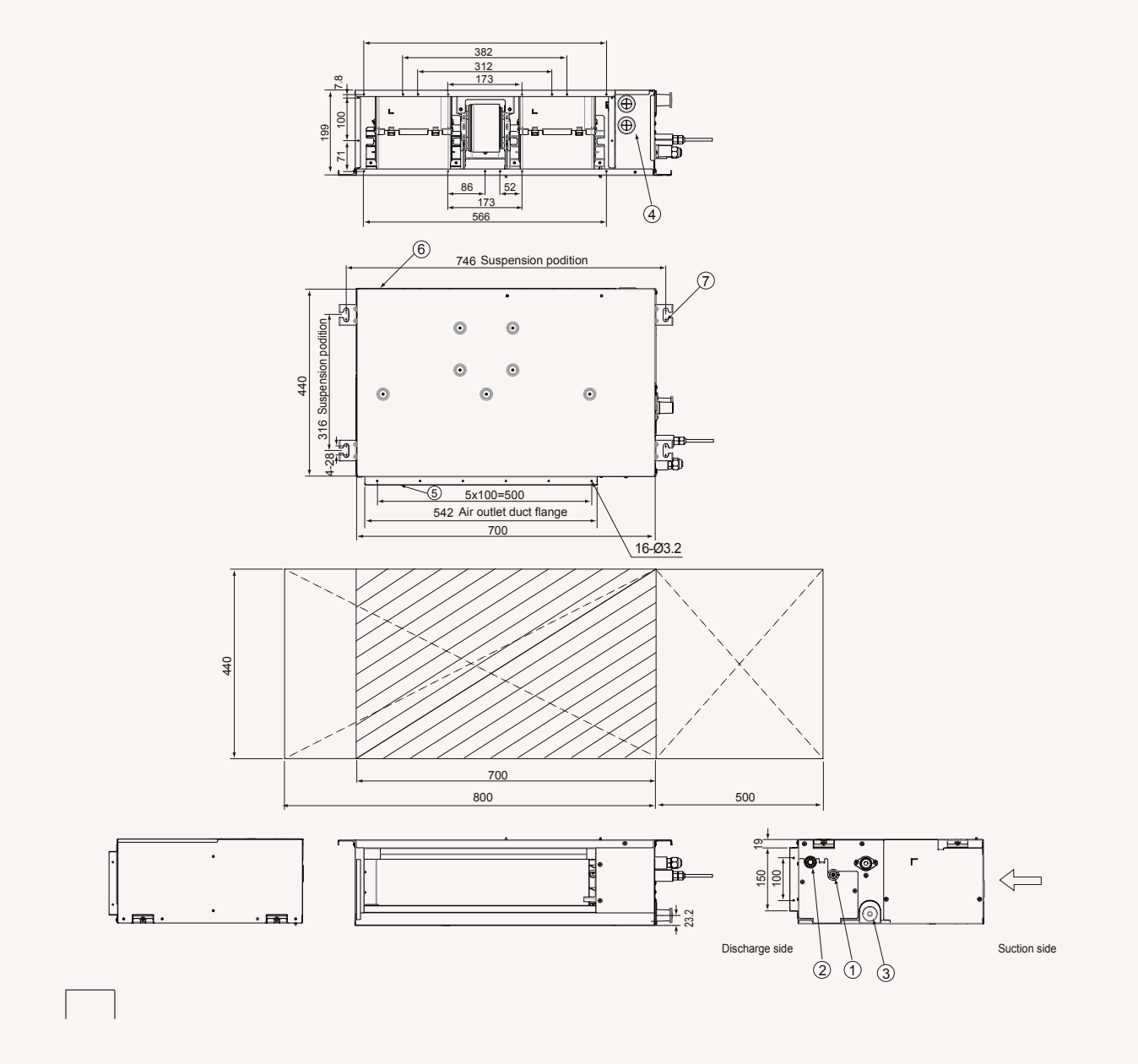

NO	Name	Description
1	Refrigerant Liquid Pipe	Ø6.35 [1/4"]
2	Refrigerant Gas Pipe	Φ12.70 [1/2"]
3	Drain pipe connection without drain pump	VP25 (OD 32, ID 25)
4	Power supply / Communication connection	-
5	Air discharge grille flange	-
6	Return air side	-
7	Hook	ø9.52 or M10

AM045/056ANLDKH/EU

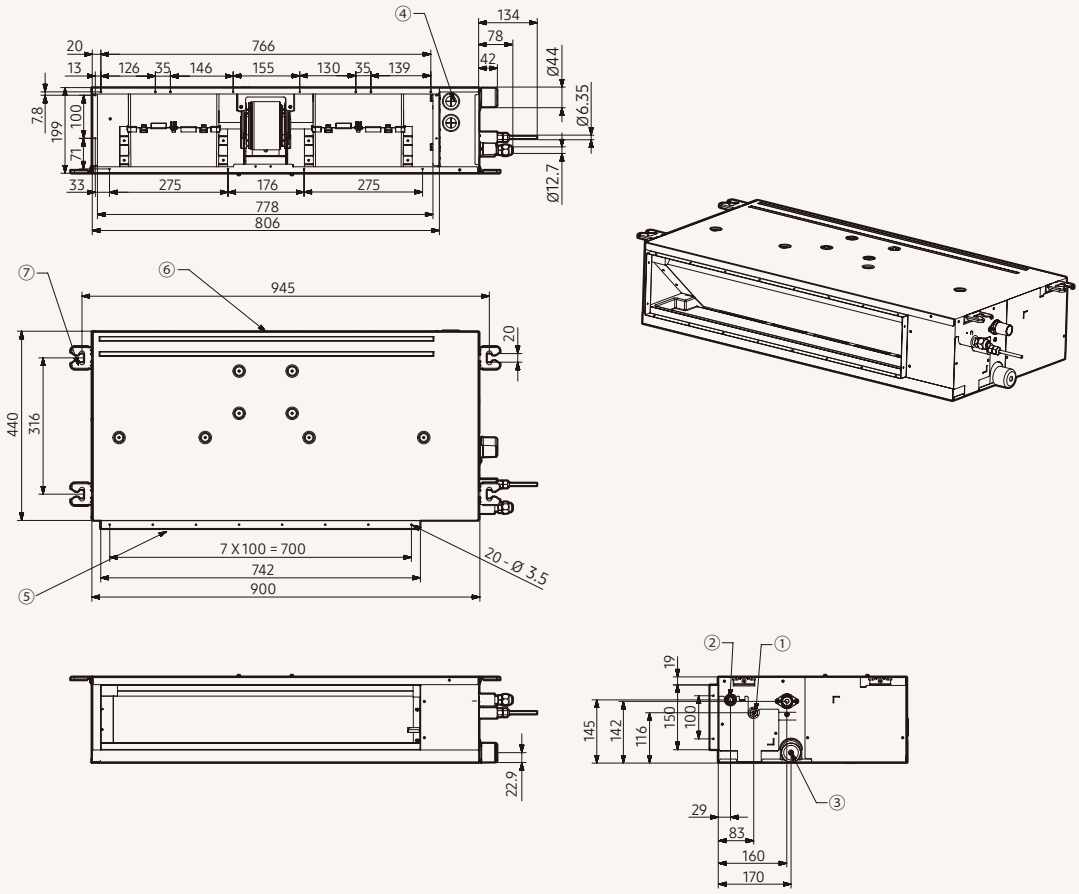

NO	Name	Description
1	Refrigerant Liquid Pipe	Ø6.35 [1/4"] Flare Connection
2	Refrigerant Gas Pipe	Φ12.70 [1/2"] Flare Connection
3	Condensate Drain (Option)	VP25 (OD 32, ID 25)
4	Power & Comm. Wiring Conduits	-
5	Supply Air Flange	-
6	Return Air Flange	-
7	Hook	-

Dimensional drawings

LSP Duct (drain pump excluded)

AM071ANLDKH/EU

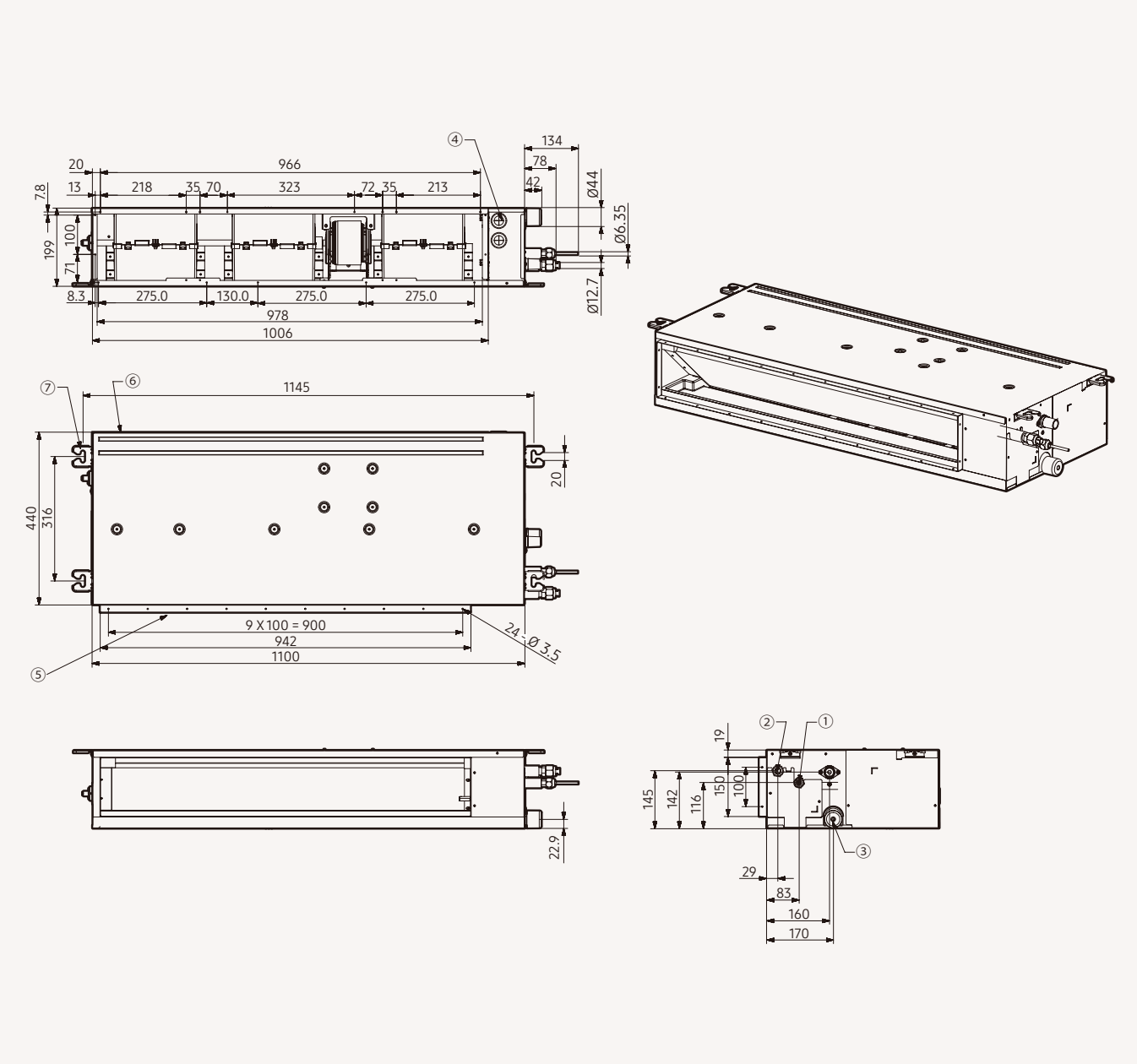

NO	Name	Description
1	Refrigerant Liquid Pipe	Ø9.52 [3/8"] Flare Connection
2	Refrigerant Gas Pipe	Φ15.88 [5/8"] Flare Connection
3	Condensate Drain (Option)	VP25 (OD 32, ID 25)
4	Power & Comm. Wiring Conduits	-
5	Supply Air Flange	-
6	Return Air Flange	-
7	Hook	-

AM090/112/128/140*NLDKH/EU

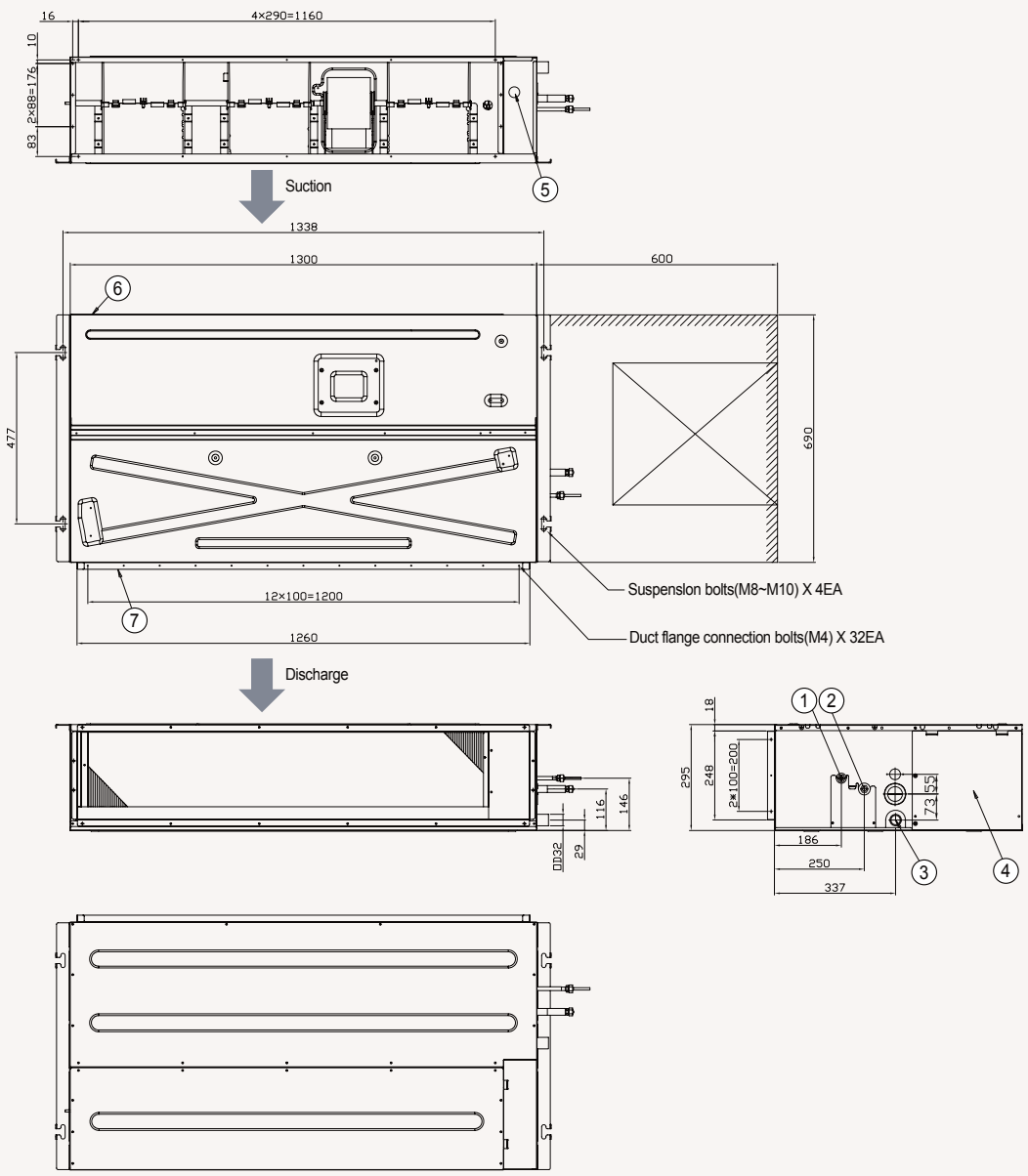

NO	Name	Description
1	Refrigerant Liquid Pipe	Ø9.52 [3/8"] Flare Connection
2	Refrigerant Gas Pipe	Φ15.88 [5/8"] Flare Connection
3	Drain pipe connection without drain pump	VP25 (OD 32, ID 25)
4	Control unit	-
5	Conduit for power supply & communication wiring	-
6	Return air side	-
7	Air outlet duct flange	-

Specifications

VRF

LSP Duct (drain pump included)

- Two-position field adjustable air return, on the bottom or at the rear of the unit.
- Equipped with one Sirocco fan direct driven by a single motor.
- Long-life washable HD 40 permanent filter is included.
- Auto Restart function.
- Built-in condensation drain pump (included).
- Can be controlled by Smartphone via Wi-Fi Kit (Optional).

Model				AM017KNLDEH/EU	AM022KNLDEH/EU	AM028KNLDEH/EU	AM036KNLDEH/EU
Power Supply			Φ, #, V, Hz	1Φ, 2, 220~240 V, 50 Hz	1Φ, 2, 220~240 V, 50 Hz	1Φ, 2, 220~240 V, 50 Hz	1Φ, 2, 220~240 V, 50 Hz
Performance	Capacity (Nominal)	Cooling	kW	1.7	2.2	2.8	3.6
		Heating	kW	1.9	2.5	3.2	4.0
Power	Power Input (Nominal)	Cooling	W	28	30	34	40
		Heating	W	28	30	36	42
	Current Input (Nominal)	Cooling	A	0.23	0.25	0.28	0.33
		Heating	A	0.23	0.25	0.30	0.35
Fan	Type		-	Sirocco Fan	Sirocco Fan	Sirocco Fan	Sirocco Fan
	Motor	Output x n	W	69 x 1	69 x 1	69 x 1	69 x 1
	Airflow Rate	H/M/L (UL)	m³/min	5.45/4.45/3.80	6.00/4.90/3.80	7.05/5.15/4.35	8.20/6.50/4.90
			l/s	90.83/74.17/63.33	100.00/81.67/63.33	117.50/85.83/72.50	136.67/108.33/81.67
	External Static Pressure	Min/Std/Max	mmAq	0.00/1.00/3.00	0.00/1.00/3.00	0.00/1.00/3.00	0.00/1.00/3.00
			Pa	0.00/9.81/29.42	0.00/9.81/29.42	0.00/9.81/29.42	0.00/9.81/29.42
Piping Connections	Liquid Pipe		ø, mm	6.35	6.35	6.35	6.35
			ø, inch	1/4	1/4	1/4	1/4
	Gas Pipe		ø, mm	12.70	12.70	12.70	12.70
			ø, inch	1/2	1/2	1/2	1/2
	Drain Pipe		ø, mm	VP25 (OD 32, ID 25)	VP25 (OD 32, ID 25)	VP25 (OD 32, ID 25)	VP25 (OD 32, ID 25)
Field Wiring	Power Source Wire		mm²	1.5~2.5	1.5~2.5	1.5~2.5	1.5~2.5
	Transmission Cable		mm²	0.75~1.50	0.75~1.50	0.75~1.50	0.75~1.50
Refrigerant	Type		-	R410A (Fluorinated greenhouse gas, GWP=2,088)			
	Control Method		-	EEV INCLUDED	EEV INCLUDED	EEV INCLUDED	EEV INCLUDED
Sound	Sound Pressure[1]	(H/M/L)	dB(A)	25/22/19	26/23/19	28/24/19	31/26/ 20
	Sound Power	Cooling	dB(A)	40	42	44	46
Dimensions	Net Weight		kg	15.3	15.3	15.3	15.7
	Net Dimensions (W × H × D)		mm	700 x 199 x 440	700 x 199 x 440	700 x 199 x 440	700 x 199 x 440
Air Filter			-	Long-life Filter	Long-life Filter	Long-life Filter	Long-life Filter
Additional Accessories	Drain Pump		-	Included	Included	Included	Included
	Max. Lifting Height/Displacement		mm / litres/h	750/24	750/24	750/24	750/24

Accessories					
Wireless Remote Controller	Touch Controller	Wired Remote Controller	Wi-Fi Kit	Wireless Receiver Kit	External Room Sensor
AR-EH03E (to be matched with MRK-A10N)	MWR-SH11N	MWR-WG00*N	MIM-H04EN	MRK-A10N (to be matched with AR-EH03E)	MRW-TA

[1] Sound pressure level is obtained in an anechoic room. Sound pressure level is a relative value, depending on the distance and acoustic environment. Sound pressure level may differ depending on operation conditions.

AM045MNLDEH/EU	AM056MNLDEH/EU	AM071MNLDEH/EU	AM090MNLDKH/EU	AM112MNLDKH/EU	AM128MNLDKH/EU	AM140MNLDKH/EU
1Φ, 2, 220~240 V, 50 Hz	1Φ, 2, 220~240 V, 50 Hz	1Φ, 2, 220~240 V, 50 Hz	1,2,220-240,50/60	1,2,220-240,50/60	1,2,220-240,50/60	1,2,220-240,50/60
4.5	5.6	7.1	9.0	11.2	12.8	14.0
5.0	6.3	8.0	10.0	12.5	13.8	16.0
51	73	82	170	170	200	220
46	68	77	170	170	200	220
0.45	0.62	0.69	0.96	0.96	1.28	1.43
0.41	0.58	0.65	0.96	0.96	1.28	1.43
Sirocco Fan	Sirocco Fan	Sirocco Fan	Sirocco Fan	Sirocco Fan	Sirocco Fan	Sirocco Fan
84 x 1	84 x 1	84 x 1	183 x 1	183 x 1	183 x 1	183 x 1
12.50/10.00/7.50	15.50/12.50/9.50	18.00/14.50/11.00	29.00/27.00/25.00	31.20/29.00/27.00	34.00/32.00/30.00	36.00/34.00/32.00
208.33/166.67/125.00	258.33/208.33/158.33	300.00/241.67/183.33	483.33/450.00/416.67	520.00/483.33/450.00	567.00/533.00/500.00	600.00/566.67/533.33
0.00/2.00/4.00	0.00/2.00/4.00	0.00/2.00/4.00	0.00/3.00/6.00	0.00/3.00/6.00	0.00/3.00/6.00	0.00/3.00/6.00
0.00/19.61/39.23	0.00/19.61/39.23	0.00/19.61/39.23	0.00/29.42/58.84	0.00/29.42/58.84	0.00/29.42/58.84	0.00/29.42/58.84
6.35	6.35	9.52	9.52	9.52	9.52	9.52
1/4	1/4	3/8	3/8	3/8	3/8	3/8
12.70	12.70	15.88	15.88	15.88	15.88	15.88
1/2	1/2	5/8	5/8	5/8	5/8	5/8
VP25 (OD 32, ID 25)	VP25 (OD 32, ID 25)	VP25 (OD 32, ID 25)	VP25 (OD 32, ID 25)	VP25 (OD 32, ID 25)	VP25 (OD 32, ID 25)	VP25 (OD 32, ID 25)
1.5~2.5	1.5~2.5	1.5~2.5	1.5~2.5	1.5~2.5	1.5~2.5	1.5~2.5
0.75~1.50	0.75~1.50	0.75~1.50	0.75~1.50	0.75~1.50	0.75~1.50	0.75~1.50
R410A (Fluorinated greenhouse gas, GWP=2,088)						
EEV INCLUDED	EEV INCLUDED	EEV INCLUDED	EEV INCLUDED	EEV INCLUDED	EEV INCLUDED	EEV INCLUDED
32 / 28 / 25	34 / 30 / 26	34 / 30 / 27	37/36/34	37/36/34	37 / 36 / 34	39/38/36
47	51	53	66	66	66	68
18.9	18.9	22.3	40.5	40.5	42.0	42.0
900 x 199 x 440	900 x 199 x 440	1100 x 199 x 440	1,300 x 295 x 690	1,300 x 295 x 690	1,300 x 295 x 690	1,300 x 295 x 690
Long-life Filter	Long-life Filter	Long-life Filter	Long-life Filter	Long-life Filter	Long-life Filter	Long-life Filter
Included	Included	Included	Included	Included	Included	Included
750/24	750/24	750/24	750/24	750/24	750/24	750/24

Dimensional drawings

LSP Duct (drain pump included)

AM017/022/028/036KNLDEH/EU

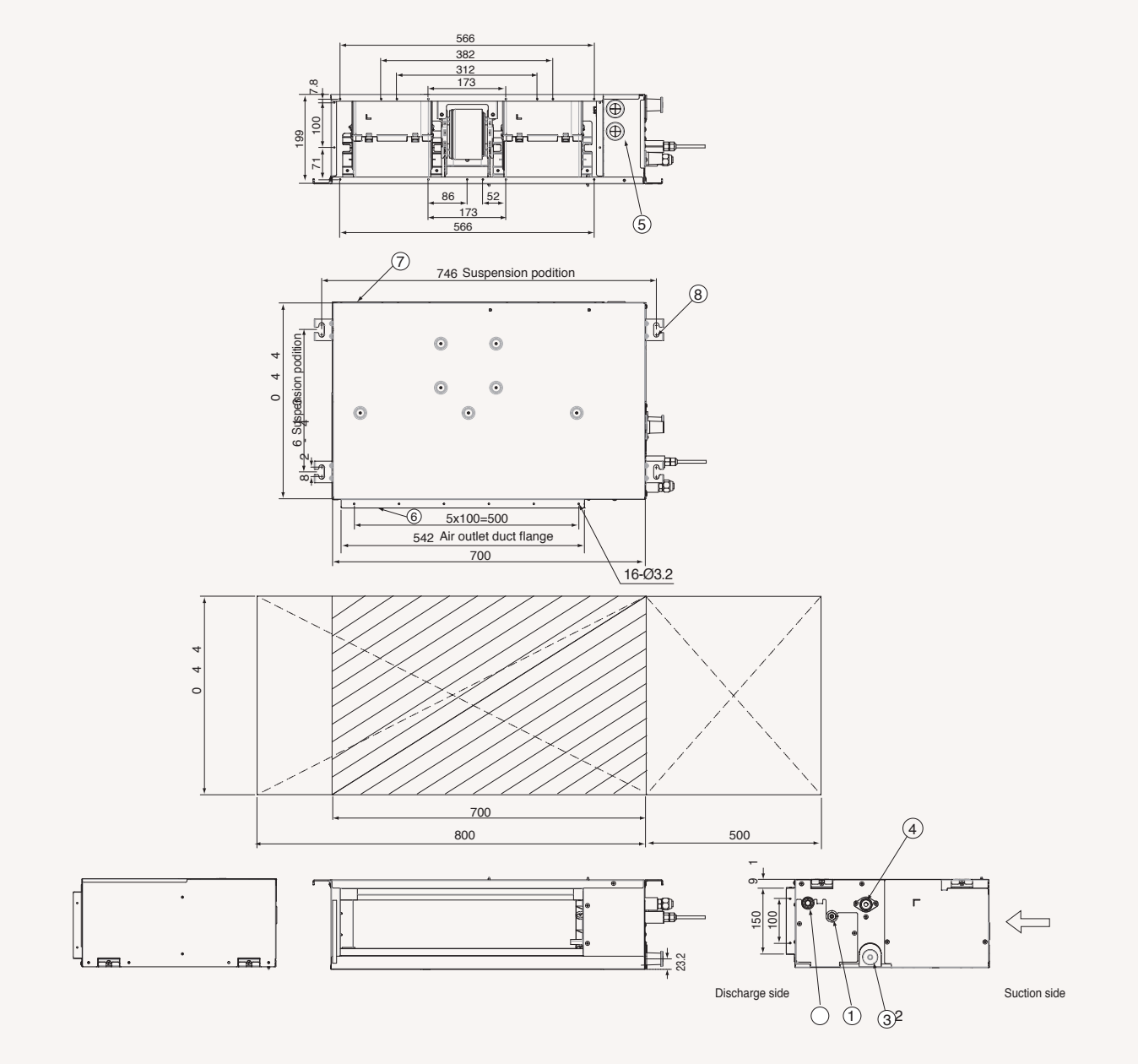

NO	Name	Description
1	Liquid pipe connection	ø6.35 Flare
2	Gas pipe connection	ø12.70 Flare
3	Drain pipe connection without drain pump	VP25 (OD 32, ID 25)
4	Drain pipe connection with drain pump	VP25 (OD 32, ID 25)
5	Power supply/communication wiring conduits	
6	Air discharge grille flange	
7	Return air side	
8	Hook	ø9.52 or M10

AM045/056MNLDEH/EU

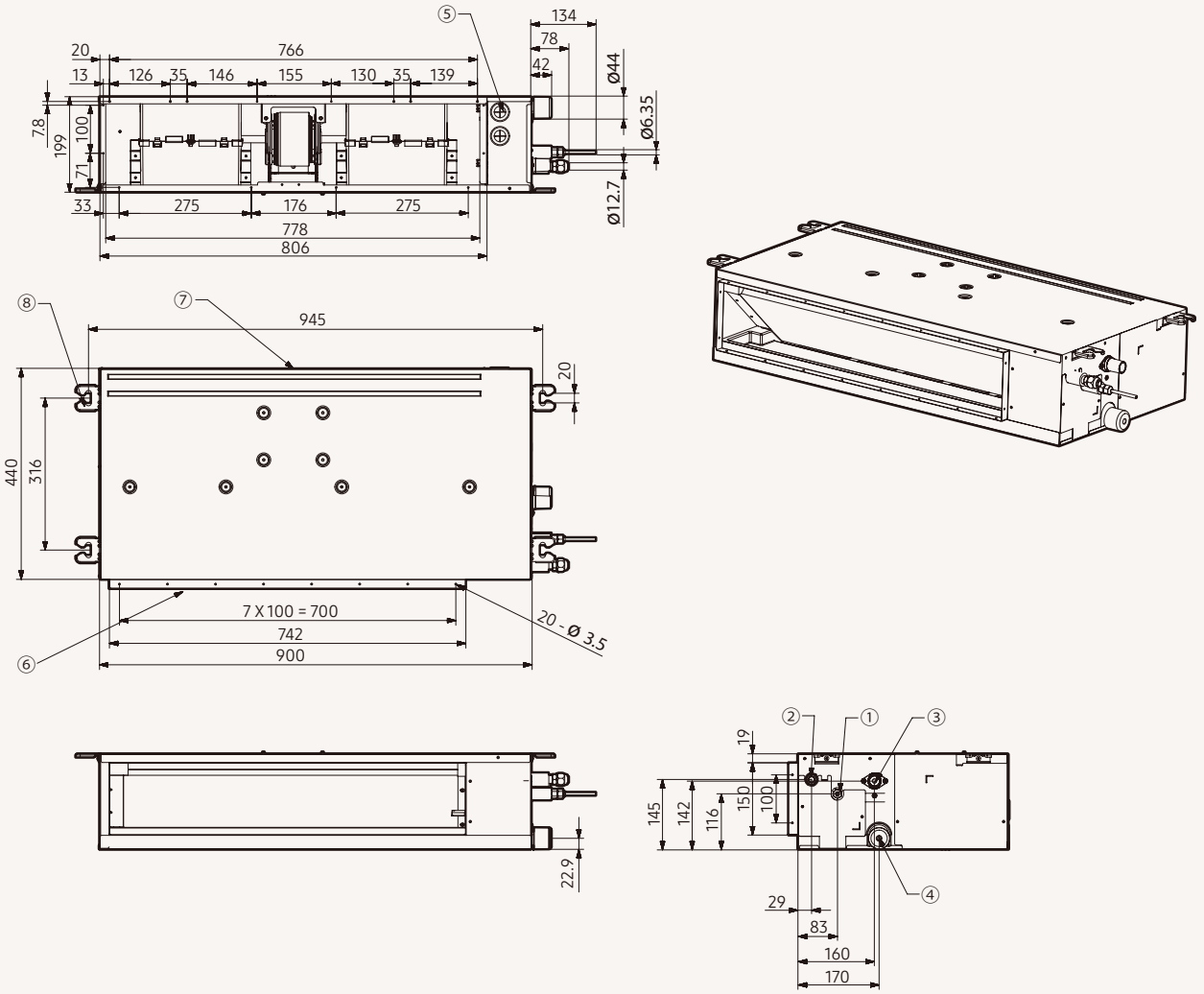

NO	Name	Description
1	Refrigerant Liquid Pipe	Ø6.35 [1/4"] Flare Connection
2	Refrigerant Gas Pipe	Φ12.70 [1/2"] Flare Connection
3	Condensate Drain	VP25 (OD 32, ID 25)
4	Condensate Drain (Option)	VP25 (OD 32, ID 25)
5	Power & Comm. Wiring Conduits	-
6	Supply Air Flange	-
7	Return Air Flange	-
8	Hook	-

Dimensional drawings

LSP Duct (drain pump included)

AM071MNLDEH/EU

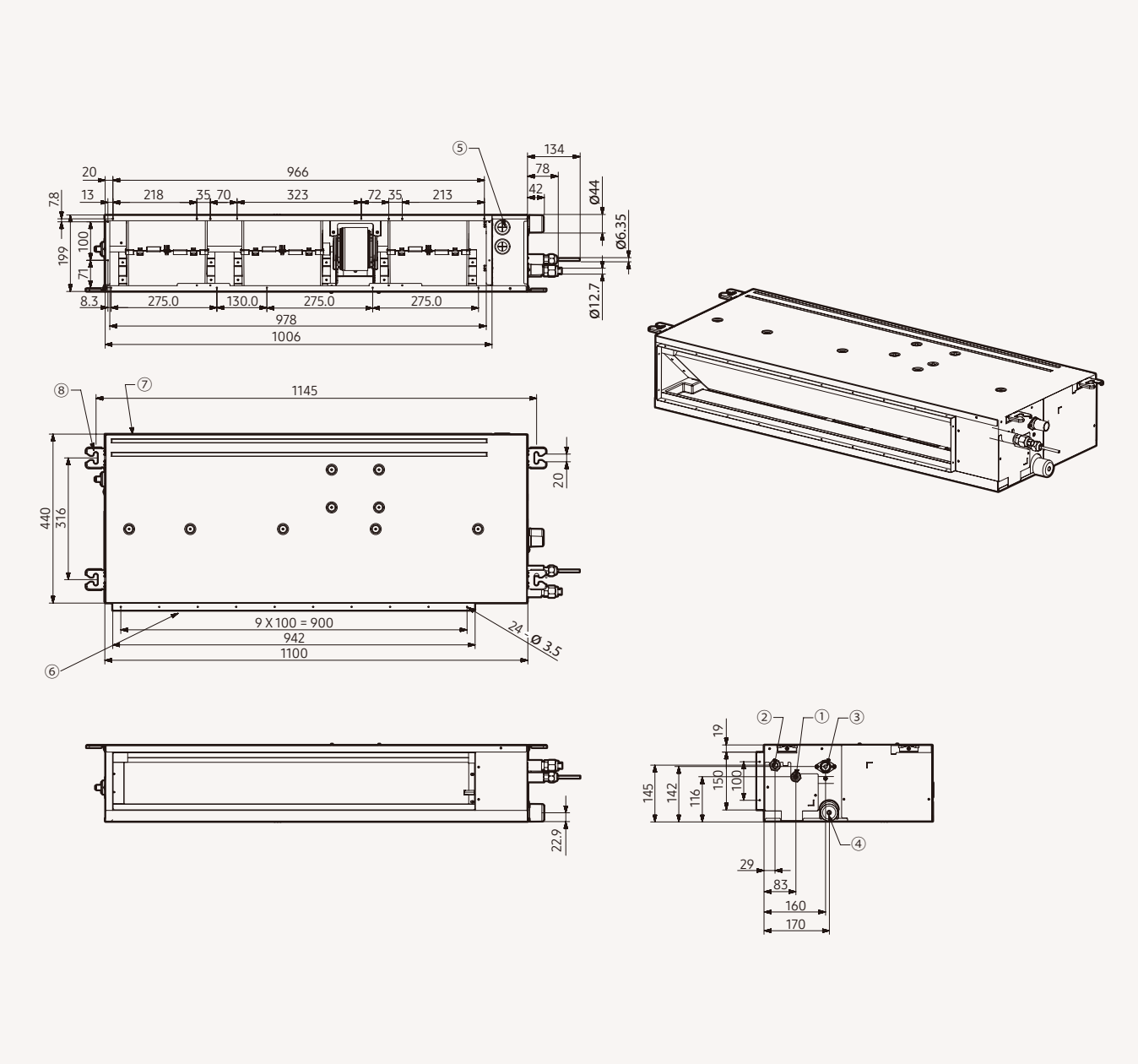

NO	Name	Description
1	Refrigerant Liquid Pipe	Ø9.52 [3/8"] Flare Connection
2	Refrigerant Gas Pipe	Φ15.88 [5/8"] Flare Connection
3	Condensate Drain	VP25 (OD 32, ID 25)
4	Condensate Drain (Option)	VP25 (OD 32, ID 25)
5	Power & Comm. Wiring Conduits	-
6	Supply Air Flange	-
7	Return Air Flange	-
8	Hook	-

AM090/112/128/140MNLDKH/EU

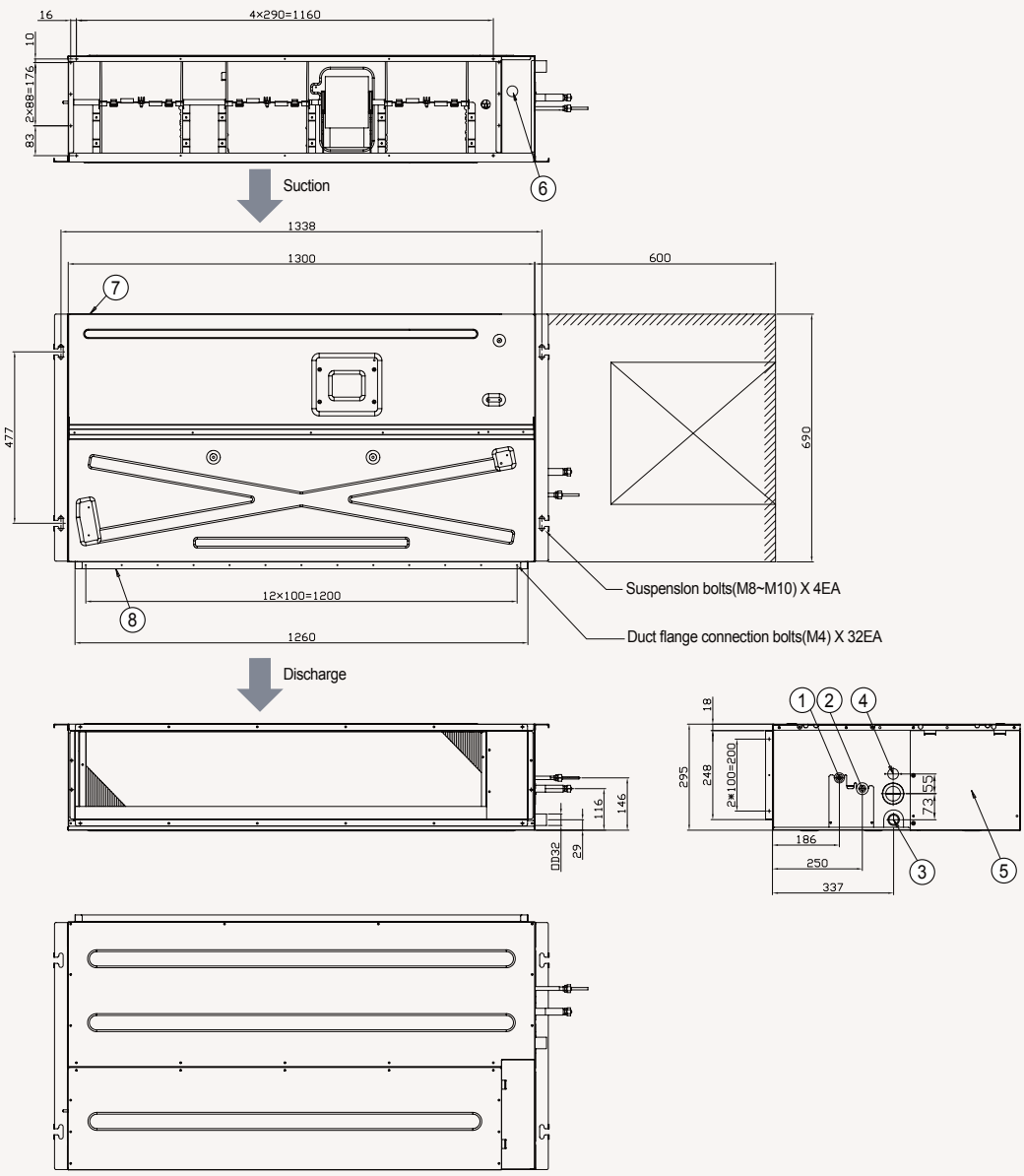

NO	Name	Description
1	Refrigerant Liquid Pipe	Ø9.52 [3/8"] Flare Connection
2	Refrigerant Gas Pipe	Φ15.88 [5/8"] Flare Connection
3	Drain pipe connection without drain pump	VP25 (OD 32, ID 25)
4	Drain pipe connectino with drain pump	VP25 (OD 32, ID 25)
5	Control unit	-
6	Conduit for power supply & communication wiring	-
7	Return air side	-
8	Air outlet duct flange	-

Specifications

VRF

MSP Duct (drain pump included)

- Two-position field adjustable air return, on the bottom or at the rear of the unit.
- Equipped with one Sirocco fan direct driven by a single motor.
- Long-life washable permanent filter is included.
- Auto Restart function.
- Automatic ESP setting.
- Built-in condensation drain pump.
- Can be controlled by Smartphone via Wi-Fi Kit (Optional).

Model				AM022ANMPKH/EU	AM028ANMPKH/EU	AM036ANMPKH/EU
Power Supply			Φ, #, V, Hz	1Φ, 2, 220~240 V, 50/60 Hz	1Φ, 2, 220~240 V, 50/60 Hz	1Φ, 2, 220~240 V, 50/60 Hz
Performance	Capacity (Nominal)	Cooling	kW	2.2	2.8	3.6
		Heating	kW	2.5	3.2	4.0
Power	Power Input (Nominal)	Cooling	W	42	42	45
		Heating	W	42	42	45
	Current Input (Nominal)	Cooling	A	0.4	0.4	0.4
		Heating	A	0.4	0.4	0.4
	Current Input (Nominal)	MCA	A	0.67	0.67	0.81
		MFA/MOP	A	15	15	15
Fan	Type		-	Sirocco Fan	Sirocco Fan	Sirocco Fan
	Number of Fans		ea	2	2	2
	Airflow Rate	H/M/L (UL)	m³/min	10.5 / 9.0 / 7.0	10.5 / 9.0 / 7.0	12.0 / 9.5 / 7.5
			l/s	170 / 150 /115	170 / 150 /115	200 / 158 / 125
	External Pressure	Min/Std/Max	mmAq	0 / 2.5 / 15	0 / 2.5 / 15	0 / 2.5 / 15
			Pa	0.00 / 24.52 / 147.10	0.00 / 24.52 / 147.10	0.00 / 24.52 / 147.10
Fan Motor	Model		-	BLDC motor (feedback)	BLDC motor (feedback)	BLDC motor (feedback)
	Output x n		W	153 x 1	153 x 1	153 x 1
Piping Connections	Liquid Pipe		ø, mm	6.35	6.35	6.35
			ø, inch	1/4	1/4	1/4
	Gas Pipe		ø, mm	12.70	12.70	12.70
			ø, inch	1/2	1/2	1/2
	Drain Pipe		ø, mm	VP25 (OD 32, ID 25)	VP25 (OD 32, ID 25)	VP25 (OD 32, ID 25)
Wiring Connections	For power supply	Minimum	mm²	1.5	1.5	1.5
	Connection with Indoor	Minimum	mm²	0.75	0.75	0.75
		Remark	-	F1, F2	F1, F2	F1, F2
Refrigerant	Type		-	R410A (Fluorinated greenhouse gas, GWP=2,088)		
	Control Method		-	EEV Included	EEV Included	EEV Included
Sound	Sound Pressure[1]	(H/M/L)	dB(A)	28/26/24	28/26/24	30/27/24
	Sound Power	Cooling (Nominal)	dB(A)	50	51	53
Dimensions	Net Weight		kg	27.9	27.9	27.5
	Net Dimensions (W × H × D)		mm	850 x 250 x 700	850 x 250 x 700	850 x 250 x 700
Air Filter	Type		-	Long-life filter	Long-life filter	Long-life filter
Additional Accessories	Drain Pump		Model	INCLUDED	INCLUDED	INCLUDED
		Max. Lifting Height	mm	750	750	750

Accessories				
Wireless Remote Controller	Touch Controller	Wi-Fi Kit	Wireless Receiver Kit	External Room Sensor
AR-EH03E (to be matched with MRK-A10N)	MWR-SH11N	MIM-H04EN	MRK-A10N (to be matched with AR-EH03E)	MRW-TA

[1] Sound pressure level is obtained in an anechoic room. Sound pressure level is a relative value, depending on the distance and acoustic environment. Sound pressure level may differ depending on operation conditions.

AM045ANMPKH/EU	AM056ANMPKH/EU	AM071ANMPKH/EU	AM090ANMPKH/EU	AM112ANMPKH/EU	AM128ANMPKH/EU	AM140ANMPKH/EU
1Φ, 2, 220~240 V, 50/60 Hz	1Φ, 2, 220~240 V, 50/60 Hz	1Φ, 2, 220~240 V, 50/60 Hz	1Φ, 2, 220~240 V, 50/60 Hz	1Φ, 2, 220~240 V, 50/60 Hz	1Φ, 2, 220~240 V, 50/60 Hz	1Φ, 2, 220~240 V, 50/60 Hz
4.5	5.6	7.1	9.0	11.2	12.8	14.0
5.0	6.3	8.0	10.0	12.5	13.8	16.0
55	70	110	135	130	160	210
55	70	110	135	130	160	210
0.5	0.6	1.0	1.2	1.2	1.4	1.7
0.5	0.6	1.0	1.2	1.2	1.4	1.7
0.89	1.08	1.48	1.78	1.97	2.17	2.38
15	15	15	15	15	15	15
Sirocco Fan	Sirocco Fan	Sirocco Fan	Sirocco Fan	Sirocco Fan	Sirocco Fan	Sirocco Fan
2	2	2	3	3	3	3
14.0 / 11.0 / 8.0	16.0 / 13.5 / 9.0	22.0 / 18.0 / 13.0	27.0 / 22.0 / 16.0	30.0 / 25.0 / 18.0	36.0 / 30.0 / 23.0	40.0 / 34.0 / 24.0
233 / 183 / 133	267 / 225 / 150	350 / 300 / 217	450 / 367 / 267	500 / 417 / 300	600 / 500 / 383	667 / 567 / 400
0 / 3 / 15	0 / 3 / 15	0 / 3 / 15	0 / 4 / 15	0 / 5.2 / 15	0 / 5.2 / 15	0 / 5.2 / 15
0.00 / 29.42 / 147.10	0.00/29.42/147.10	0.00/29.42/147.10	0.00 / 39.23/ 147.10	0.00 / 50.99/ 147.10	0.00 / 50.99/ 147.10	0.00 / 50.99/ 147.10
BLDC motor (feedback)	BLDC motor (feedback)	BLDC motor (feedback)	BLDC motor (feedback)	BLDC motor (feedback)	BLDC motor (feedback)	BLDC motor (feedback)
153 x 1	153 x 1	153 x 1	153 x 1	244 x 1	244 x 1	244 x 1
6.35	6.35	9.52	9.52	9.52	9.52	9.52
1/4	1/4	3/8	3/8	3/8	3/8	3/8
12.70	12.70	15.88	15.88	15.88	15.88	15.88
1/2	1/2	5/8	5/8	5/8	5/8	5/8
VP25 (OD 32, ID 25)	VP25 (OD 32, ID 25)	VP25 (OD 32, ID 25)	VP25 (OD 32, ID 25)	VP25 (OD 32, ID 25)	VP25 (OD 32, ID 25)	VP25 (OD 32, ID 25)
1.5	1.5	1.5	1.5	1.5	1.5	1.5
0.75	0.75	0.75	0.75	0.75	0.75	0.75
F1, F2	F1, F2	F1, F2	F1, F2	F1, F2	F1, F2	F1, F2
R410A (Fluorinated greenhouse gas, GWP=2,088)						
EEV Included	EEV Included	EEV Included	EEV Included	EEV Included	EEV Included	EEV Included
31/28/25	32/29/25	36/32/27	37/33/29	36/33/30	37/34/31	39/36/33
54	57	60	61	61	62	64
27.5	27.5	27.5	35.0	39.5	39.5	39.5
850 x 250 x 700	850 x 250 x 700	850 x 250 x 700	1,200 x 250 x 700	1,300 x 300 x 700	1,300 x 300 x 700	1,300 x 300 x 700
Long-life filter	Long-life filter	Long-life filter	Long-life filter	Long-life filter	Long-life filter	Long-life filter
INCLUDED	INCLUDED	INCLUDED	INCLUDED	INCLUDED	INCLUDED	INCLUDED
750	750	750	750	750	750	750

Dimensional drawings

MSP Duct (drain pump included)

AM022/028ANMPKH/EU

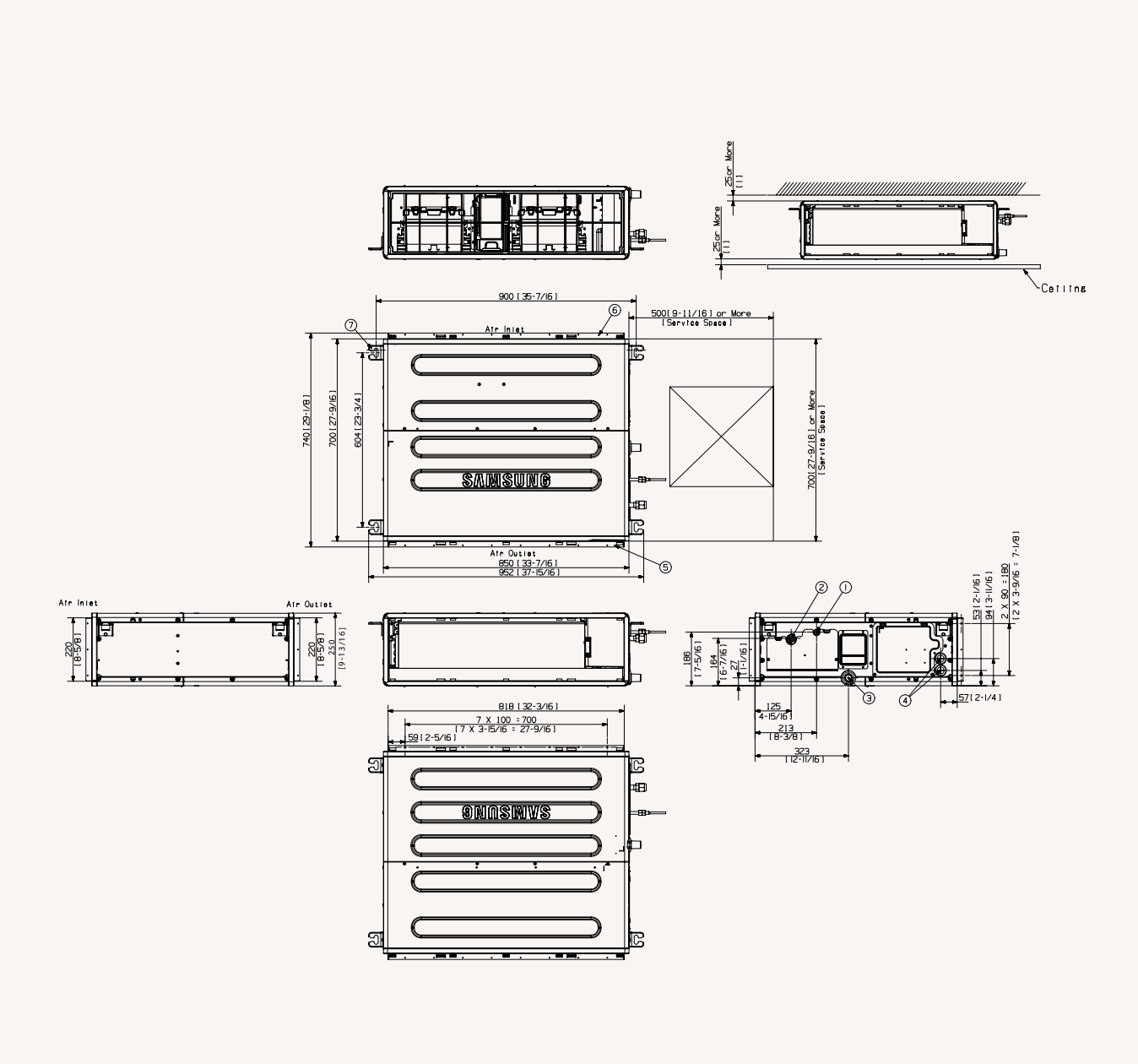

NO	Name	Description
1	Liquid pipe connection	ø6.35 Flare
2	Gas pipe connection	ø12.70 Flare
3	Drain pipe connection without drain pump	VP25 (OD 32, ID 25)
4	Drain pipe connection with drain pump	VP25 (OD 32, ID 25)
5	Control unit	
6	Power supply/communication wiring conduits	
7	Return air side	
8	Air outlet duct flange	

AM036/045/056/071ANMPKH/EU

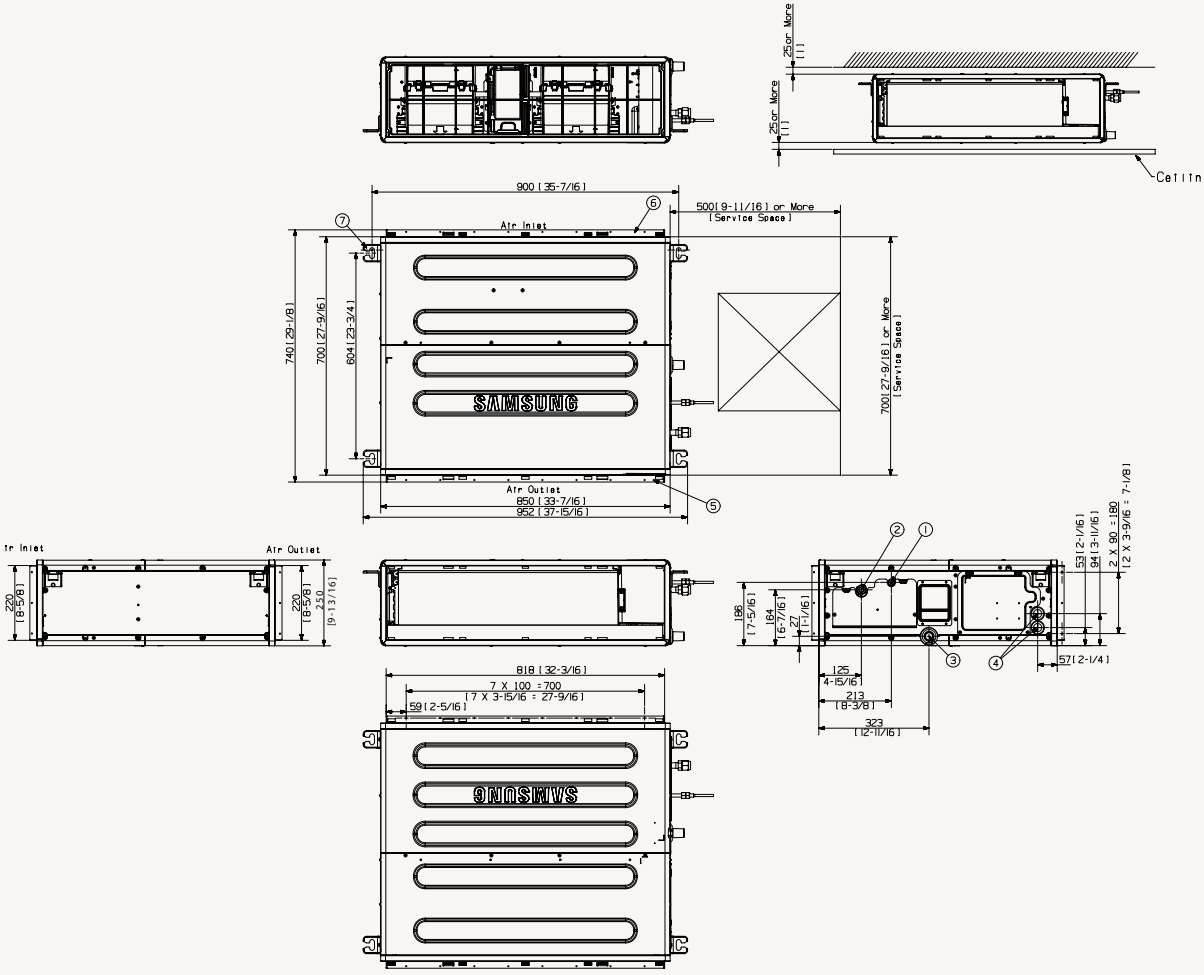

NO	Name	Description	
		AM036/045/056ANMPKH/EU	AM071ANMPKH/EU
1	Refrigerant Liquid Pipe	ø6.35 Flare	ø9.52 Flare
2	Refrigerant Gas Pipe	ø12.70 Flare	ø15.88 Flare
3	Condensate Drain	VP25 (OD 32, ID 25)	
4	Power & Comm. Wiring Conduits	-	
5	Supply Air Flange	-	
6	Return Air Flange	-	
7	Hook	-	

Dimensional drawings

MSP Duct (drain pump included)

AM090ANMPKH/EU

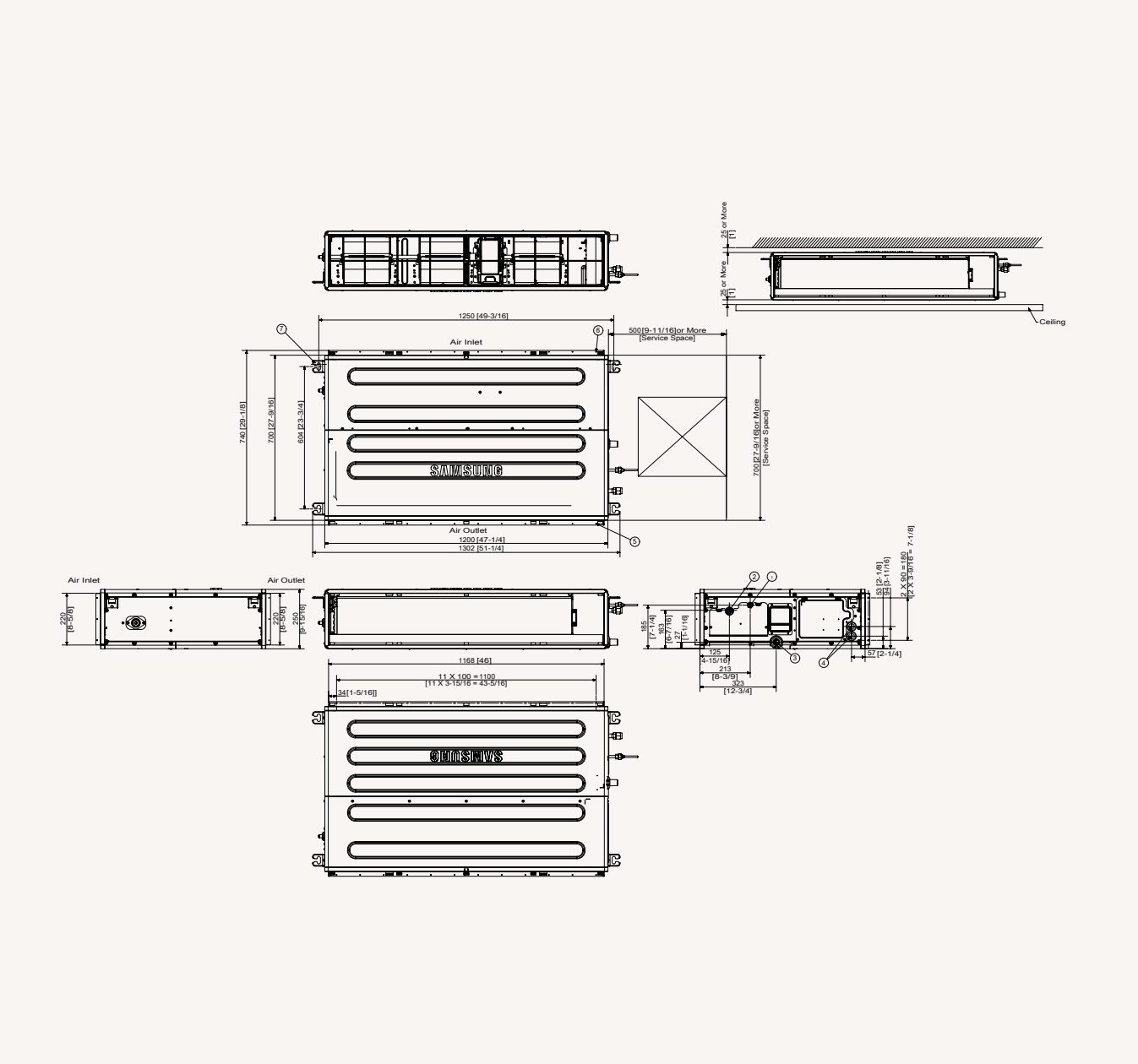

NO	Name	Description
1	Refrigerant Liquid Pipe	Ø9.52 [3/8"] Flare Connection
2	Refrigerant Gas Pipe	Φ15.88 [5/8"] Flare Connection
3	Condensate Drain	VP25 (OD 32, ID 25)
4	Power & Comm. Wiring Conduits	-
5	Supply Air Flange	-
6	Return Air Flange	-
7	Hook	-

AM112/128/140ANMPKH/EU

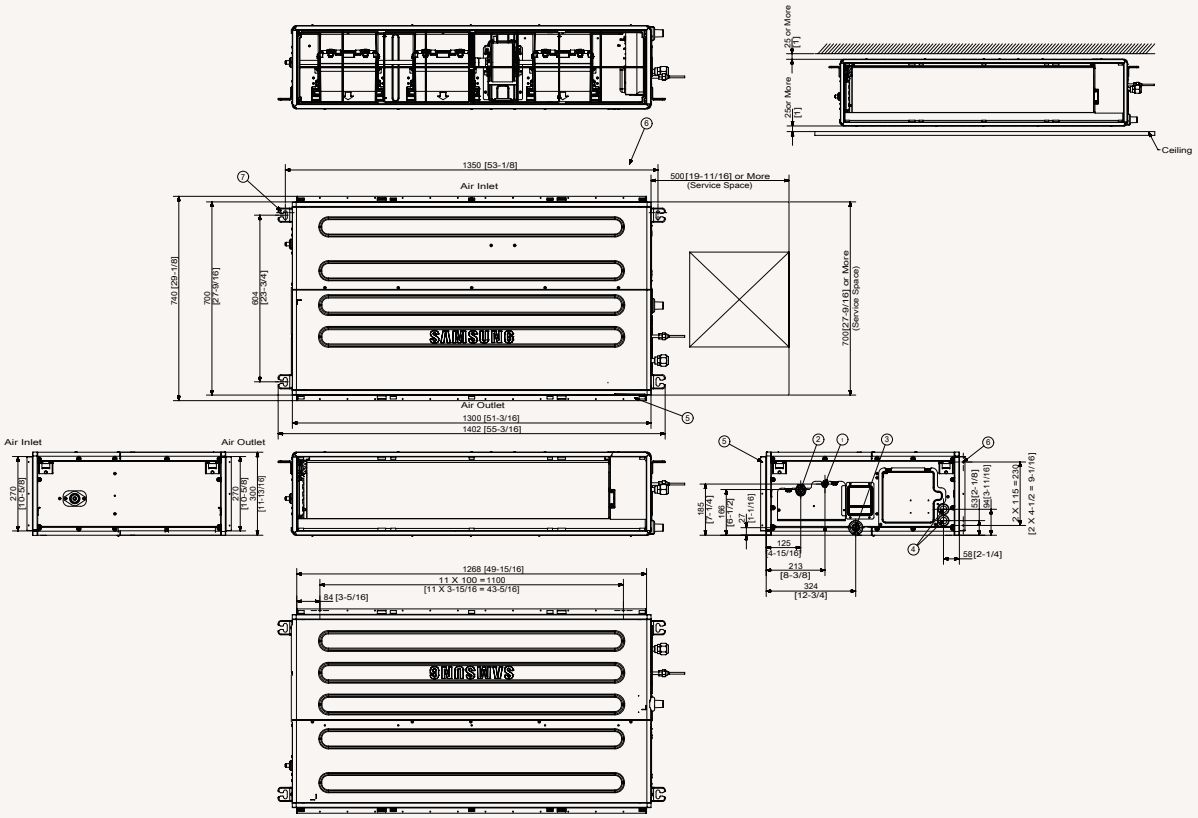

NO	Name	Description
1	Refrigerant Liquid Pipe	Ø9.52 [3/8"] Flare Connection
2	Refrigerant Gas Pipe	Φ15.88 [5/8"] Flare Connection
3	Condensate Drain	VP25 (OD 32, ID 25)
4	Power & Comm. Wiring Conduits	-
5	Supply Air Flange	-
6	Return Air Flange	-
7	Hook	-

Specifications

VRF

HSP Duct

- Two-position field adjustable air return, on the bottom or at the rear of the unit.
- Equipped with two Sirocco fans direct driven by a single motor.
- Auto Restart function.
- Auto ESP setting (model-specific).
- Long-life HD 40 permanent filter is included (model-specific).
- Can be controlled by Smartphone via Wi-Fi Kit (Optional).

Model				AM056ANHPKH/EU	AM071ANHPKH/EU	AM090ANHPKH/EU
Power Supply			Φ, #, V, Hz	1Φ, 2, 220~240 V, 50/60 Hz	1Φ, 2, 220~240 V, 50/60 Hz	1Φ, 2, 220~240 V, 50/60 Hz
Performance	Capacity (Nominal)	Cooling	kW	5.6	7.1	9.0
		Heating	kW	6.3	8.0	10.0
Power	Power Input (Nominal)	Cooling	W	70.0	120.0	145.0
		Heating	W	70.0	120.0	145.0
	Current Input (Nominal)	Cooling	A	0.70	1.00	1.20
		Heating	A	0.70	1.00	1.20
	Current Input (Nominal)	MCA	A	1.37	1.62	2.05
		MFA/MOP	A	15	15	15
Fan	Type		-	Sirocco Fan	Sirocco Fan	Sirocco Fan
	Number of Fans		ea	3	3	3
	Airflow Rate	H/M/L (UL)	m³/min	18.00/16.00/14.00	22.00/19.00/16.00	29.00/25.00/22.00
			l/s	300.00 / 267.00 /233.00	367.00 / 317.00 / 267.00	483.00 / 417.00 / 367.00
	External Static Pressure	Min/Std/Max	mmAq	0 / 3.00 / 20.00	0 / 3.00 / 20.00	0 / 3.00 / 20.00
			Pa	0 / 29.42 / 196.13	0 / 29.42 / 196.13	0 / 29.42 / 196.13
Fan Motor	Model		-	BLDC motor	BLDC motor	BLDC motor
	Output x n		W	153 x 1	153 x 1	153 x 1
Piping Connections	Liquid Pipe		ø, mm	6.35	9.52	9.52
			ø, inch	1/4"	3/8"	3/8"
	Gas Pipe		ø, mm	12.7	15.88	15.88
			ø, inch	1/2"	5/8"	5/8"
	Drain Pipe		ø, mm	VP25 (OD 32,ID 25)	VP25 (OD 32,ID 25)	VP25 (OD 32,ID 25)
Field Wiring	Power Source Wire	Below 20 m/ over 20 m	mm²	1.5	1.5	1.5
	Transmission Cable	Transmission Cable	mm²	0.75	0.75	0.75
		Remark	-	F1,F2	F1,F2	F1,F2
Refrigerant	Type		-	R410A (Fluorinated greenhouse gas, GWP=2,088)		
	Control Method		-	EEV INCLUDED	EEV INCLUDED	EEV INCLUDED
Sound [2]	Sound Pressure[1]	(H/M/L)	dB(A)	31/28/25	32/29/26	34/31/28
	Sound Power	Cooling	dB(A)	58	58	60
Dimensions	Net Weight		kg	35.4	35.4	35.4
	Net Dimensions (W x H x D)		mm	1,200x250x700	1,200x250x700	1,200x250x700
Air Filter			-	Long-life Filter	Long-life Filter	Long-life Filter
Additional Accessories	Drain Pump	Internal	-	INCLUDED	INCLUDED	INCLUDED
		External	-	-	-	-
		Max. Lifting Height/ Displacement	mm / litres/h	750/24	750/24	750/24

Accessories

Drain Pump (optional)	Drain Pump (optional)	Wireless Remote Controller	Touch Controller	Wired Remote Controller	Wi-Fi Kit	Wireless Receiver Kit	External Room Sensor
MDP-G075SP/Q	MDP-N047SNC1D	AR-EH03E (to be matched with MRK-A10N)	MWR-SH11N	MWR-WG00*N	MIM-H04EN	MRK-A10N (to be matched with AR-EH03E)	MRW-TA

[1] Sound pressure level is obtained in an anechoic room. Sound pressure level is a relative value, depending on the distance and acoustic environment. Sound pressure level may differ depending on operation conditions.

AM112ANHPKH/EU	AM128ANHPKH/EU	AM140ANHPKH/EU	AM180JNHFKH/EU	AM220FNHDEH/EU	AM280FNHDEH/EU
1Φ, 2, 220~240 V, 50/60 Hz	1Φ, 2, 220~240 V, 50/60 Hz	1Φ, 2, 220~240 V, 50/60 Hz	1Φ, 2, 220~240 V, 50 Hz	1Φ, 2, 220~240 V, 50 Hz	1Φ, 2, 220~240 V, 50 Hz
11.2	12.8	14.0	18.0	22.4	28.0
12.5	13.8	16.0	20.0	25.0	31.5
130	185	220	340	530	790
130	185	220	340	530	790
1.20	1.30	1.50	1.90	3.80	5.90
1.20	1.30	1.50	1.90	3.80	5.90
2.41	2.96	3.23	5.72	5.80	8.64
15	15	15	15	15	15
Sirocco Fan	Sirocco Fan	Sirocco Fan	Sirocco Fan	Sirocco Fan	Sirocco Fan
3	3	3	1	1	1
32.0 / 26.0 / 20.0	37.0 / 30.0 / 22.0	41.0 / 34.0 / 25.0	58.0 / 50.0 / 43.0	58.0 / 52.0 / 47.0	72.0 / 65.0 / 58.0
533.00 / 433.00 / 333.00	617.00 / 500.00 / 367.00	683.00 / 567.00 / 417.00	966.67/833.33/716.67	966.67/866.67/783.33	1,200.00/1,083.33/966.67
3.00 / 6.20 / 20.00	3.00 / 6.20 / 20.00	3.00 / 6.20 / 20.00	5.00/7.34/20.00	5.00/15.00/25.00	5.00/15.00/28.00
29.42 / 60.80 / 196.13	29.42 / 60.80 / 196.13	29.42 / 60.80 / 196.13	49.00/71.93/196.00	49.03/147.10/245.17	49.03/147.10/274.59
BLDC motor	BLDC motor	BLDC motor	-	-	-
350 x 1	350 x 1	350 x 1	630 x 1	400 x 1	400 x 1
9.52	9.52	9.52	9.52	9.52	9.52
3/8"	3/8"	3/8"	3/8	3/8	3/8
15.88	15.88	15.88	19.05	19.05	22.23
5/8"	5/8"	5/8"	3/4	3/4	3/4
VP25 (OD 32,ID 25)	VP25 (OD 32,ID 25)	VP25 (OD 32,ID 25)	VP25 (OD 32, ID 25)	VP25 (OD 32, ID 25)	VP25 (OD 32, ID 25)
1.5	1.5	1.5	1.5/2.5	1.5/2.5	1.5/2.5
0.75	0.75	0.75	0.75~1.50	0.75~1.50	0.75~1.50
F1,F2	F1,F2	F1,F2	F1,F2	F1,F2	F1,F2
R410A (Fluorinated greenhouse gas, GWP=2,088)					
EEV INCLUDED	EEV INCLUDED	EEV INCLUDED	EEV INCLUDED	EEV INCLUDED	EEV INCLUDED
36/33/30	39/36/33	42/38/34	43/39/35	45/43/41	48/46/43
61	64	65			
44.5	44.5	44.5	82.5	89.0	89.0
1300 x 300 x 700	1300 x 300 x 700	1300 x 300 x 700	1,350 x 450 x 910	1,240 x 470 x 1,040	1,240 x 470 x 1,040
Long-life Filter	Long-life Filter	Long-life Filter	-	-	-
INCLUDED	INCLUDED	INCLUDED	MDP-G075SP	MDP-N047SNC1D	MDP-N047SNC1D
-	-	-	MDP-G075SQ	-	-
750/24	750/24	750/24	-	750/24	750/24

Dimensional drawings

HSP Duct

AM056/070/090ANHPKH/EU

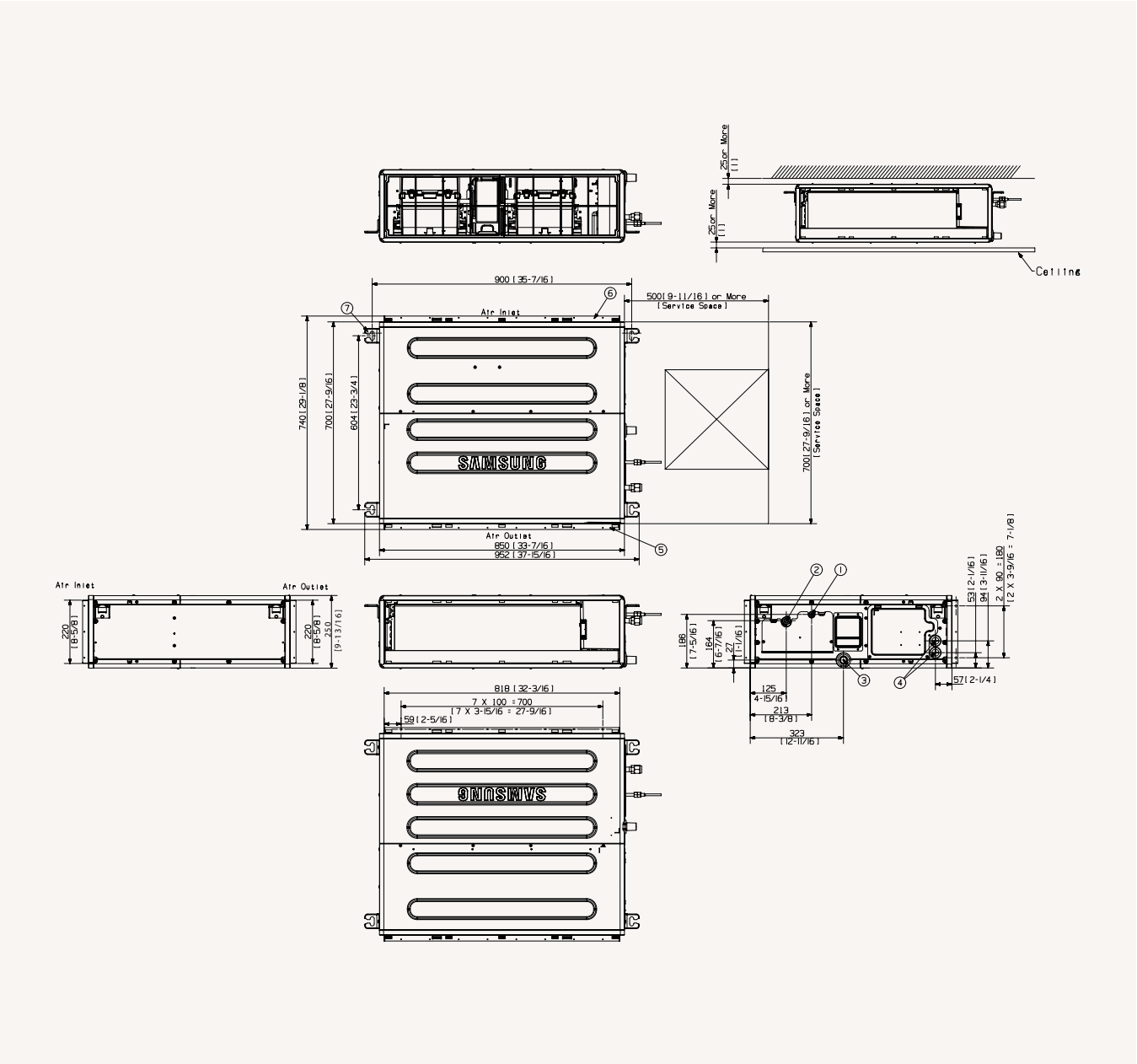

NO	Name	Description
1	Refrigerant Liquid Pipe	Ø9.52 [3/8"] Flare Connection
2	Refrigerant Gas Pipe	Φ15.88 [5/8"] Flare Connection
3	Condensate Drain	VP25 (OD 32, ID 25)
4	Power & Comm. Wiring Conduits	-
5	Supply Air Flange	-
6	Return Air Flange	-
7	Hook	-
8	Hook	3/8 or M10

AM112/128/140ANHPKH/EU

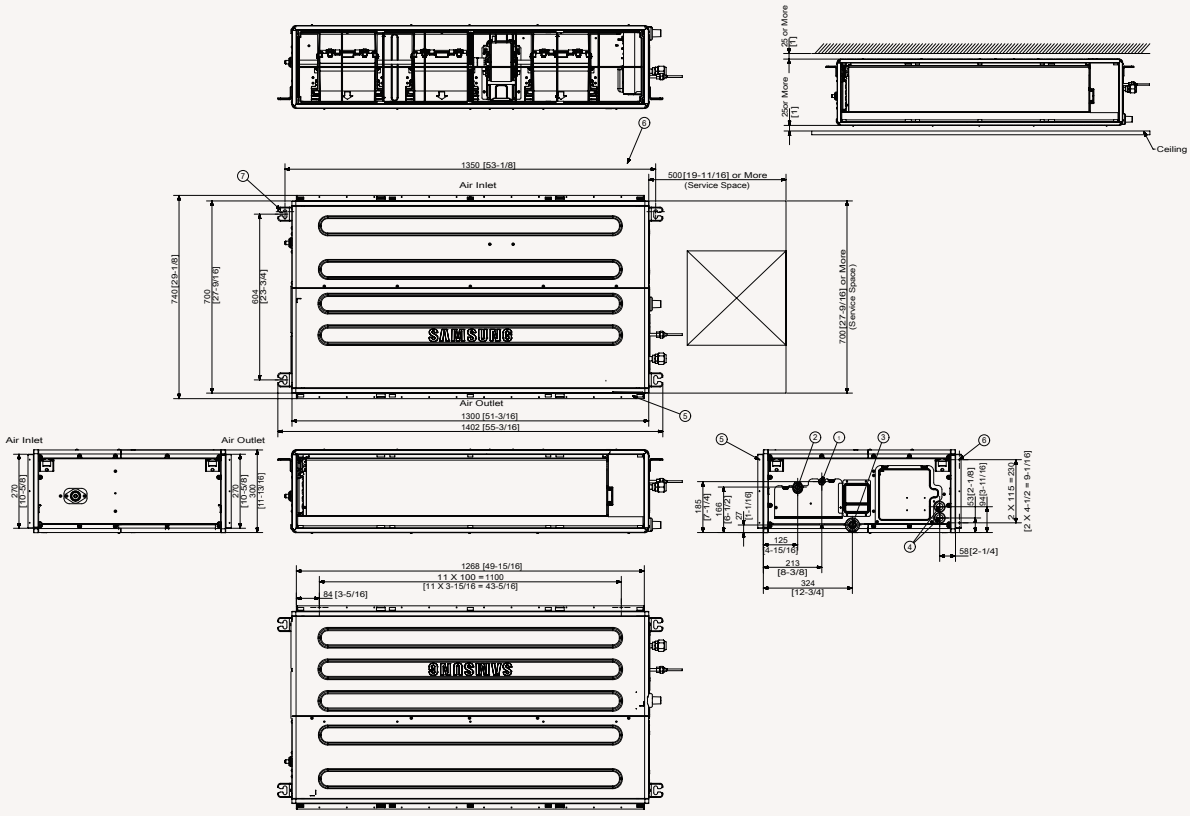

NO	Name	Description
1	Refrigerant Liquid Pipe	Ø9.52 [3/8"] Flare Connection
2	Refrigerant Gas Pipe	Φ15.88 [5/8"] Flare Connection
3	Condensate Drain	VP25 (OD 32, ID 25)
4	Power & Comm. Wiring Conduits	-
5	Supply Air Flange	-
6	Return Air Flange	-
7	Hook	-
8	Hook	3/8 or M10

Dimensional drawings

HSP Duct

AM180JNHFKH/EU

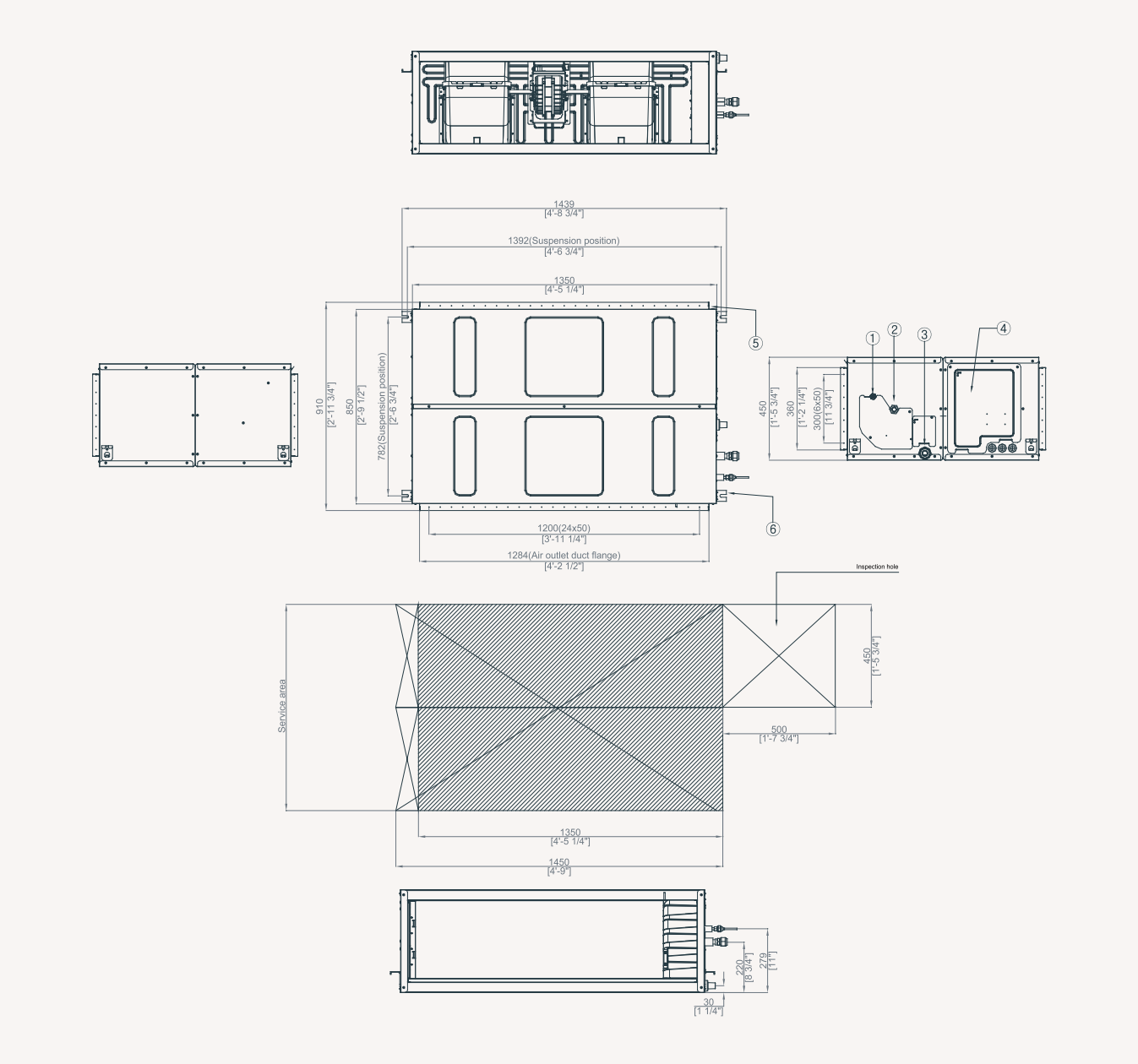

NO	Name
1	Liquid pipe connection
2	Gas pipe connection
3	Drain pipe connection
4	Power supply connetion
5	Air discharge flange
6	Hook

AM220/280FNHDEH***

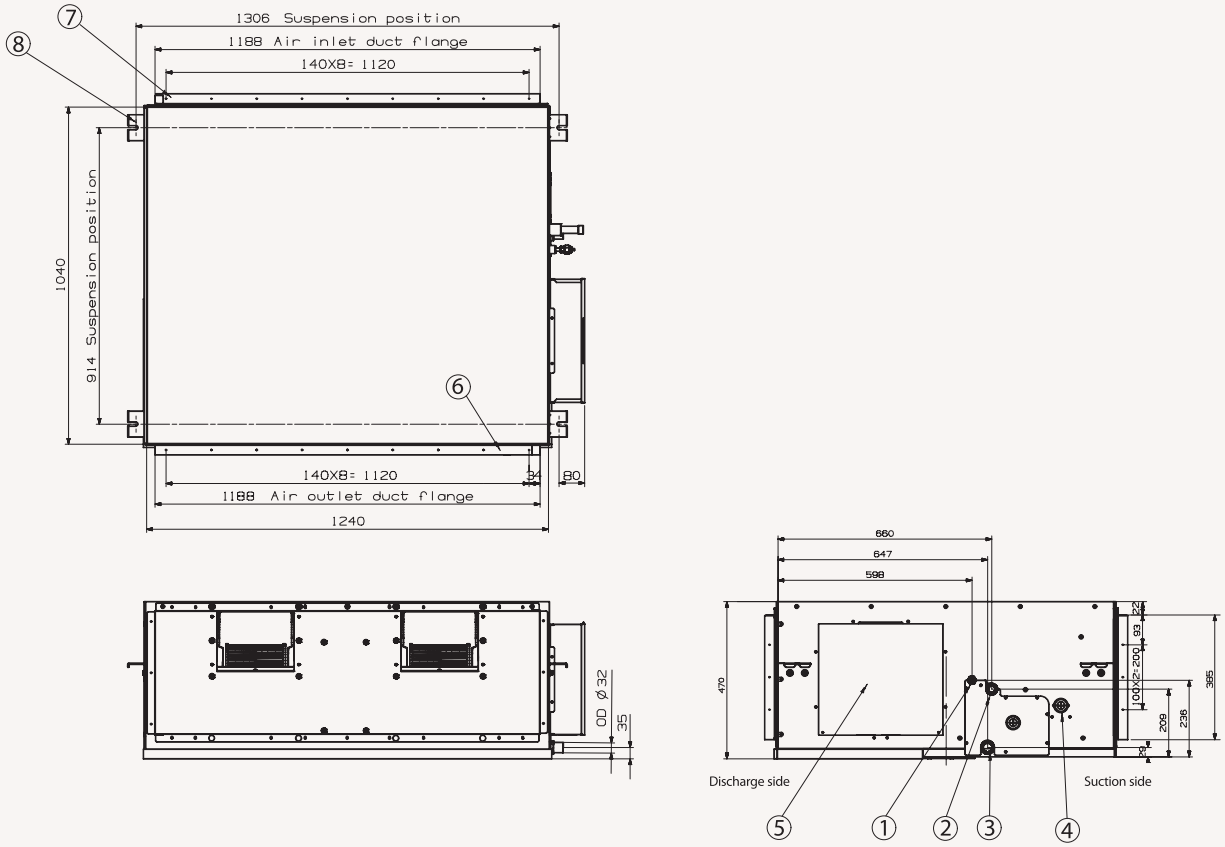

NO	Name	Description
1	Liquid pipe connection	ø9.52 (3/8)
2	Gas pipe connection	AM220***: ø19.05 (3/4), AM280***: ø22.22 (7/8)
3	Drain pipe connection	VP25 (OD 32, ID 25)
4	Power supply connetion	VP25 (OD 32, ID 25)
5	Air discharge flange	
6	Hook	
7	Suction flange	
8	Hook	3/8 or M10

Specifications

VRF

Console

- Slim design: only 199 mm in depth.
- Turbo fan with single-phase inverter motor.
- Two separate air outlets to avoid stratification.
- Long-life washable permanent filter.
- Can be controlled by Smartphone via Wi-Fi Kit (Optional).
- Auto Restart function.

Model				AM022KNJDEH/EU	AM028FNJDEH/EU	AM036FNJDEH/EU	AM045KNJDEH/EU	AM056FNJDEH/EU
Power Supply			Φ, #, V, Hz	1Φ, 2, 220~240 V, 50 Hz	1Φ, 2, 220~240 V, 50 Hz	1Φ, 2, 220~240 V, 50 Hz	1Φ, 2, 220~240 V, 50 Hz	1Φ, 2, 220~240 V, 50 Hz
Performance	Capacity (Nominal)	Cooling	kW	2.8	2.8	3.6	4.5	5.6
		Heating	kW	3.2	3.2	4	5	6.3
Power	Power Input (Nominal)	Cooling	W	30	30	35	36	62
		Heating	W	30	30	35	36	62
	Current Input (Nominal)	Cooling	A	0.25	0.25	0.29	0.30	0.49
		Heating	A	0.25	0.25	0.29	0.30	0.49
Fan	Motor	Type	-	Turbo Fan	Turbo Fan	Turbo Fan	Turbo Fan	Turbo Fan
		Output	W	37	37	37	37	37
		Number of Fans	ea	1	1	1	1	1
	Airflow Rate	H/M/L (UL)	m³/min	7.00/6.00/5.00	7.00/6.00/5.00	8.50/7.50/6.50	11.30/9.80/8.20	13.00/11.50/10.00
			l/s	116.67/100.00/83.33	116.67/100.00/83.33	141.67/125.00/108.33	188.33/163.33/136.67	216.67/191.67/166.67
Piping Connections	Liquid Pipe		ø, mm	6.35	6.35	6.35	6.35	6.35
			ø, inch	1/4	1/4	1/4	1/4	1/4
	Gas Pipe		ø, mm	12.7	12.7	12.7	12.7	12.7
			ø, inch	1/2	1/2	1/2	1/2	1/2
	Drain Pipe		ø, mm	ID 18 HOSE	ID 18 HOSE	ID 18 HOSE	ID 18 HOSE	ID 18 HOSE
Field Wiring	Power Source Wire		mm²	1.5/2.5	1.5/2.5	1.5/2.5	1.5/2.5	1.5/2.5
	Transmission Cable		mm²	0.75~1.50	0.75~1.50	0.75~1.50	0.75~1.50	0.75~1.50
Refrigerant	Type		-	R410A (Fluorinated greenhouse gas, GWP=2,088)				
	Control Method		-	EEV INCLUDED	EEV INCLUDED	EEV INCLUDED	EEV INCLUDED	EEV INCLUDED
Sound	Pressure[1]	(H/M/L)	dB(A)	38/36/34	38/36/34	39/37/34	42/39/36	43/40/37
	Power	Cooling	dB(A)	58	58	59	63	64
Dimensions	Net Weight		kg	16.0	16.0	16.0	16.0	16.0
	Net Dimensions (W x H x D)		mm	720 x 620 x 199	720 x 620 x 199	720 x 620 x 199	720 x 620 x 199	720 x 620 x 199
Air Filter			-	-	Long-life Filter	Long-life Filter	-	Long-life Filter

Accessories			
Touch Controller	Wired Remote Controller	Wi-Fi Kit	External Room Sensor
MWR-SH11N	MWR-WG00*N	MIM-H04EN	MRW-TA

[1] Sound pressure level is obtained in an anechoic room. Sound pressure level is a relative value, depending on the distance and acoustic environment. Sound pressure level may differ depending on operation conditions.

Dimensional drawings

Console

AM022KNJDEH/EU, AM028/036FNJDEH/EU

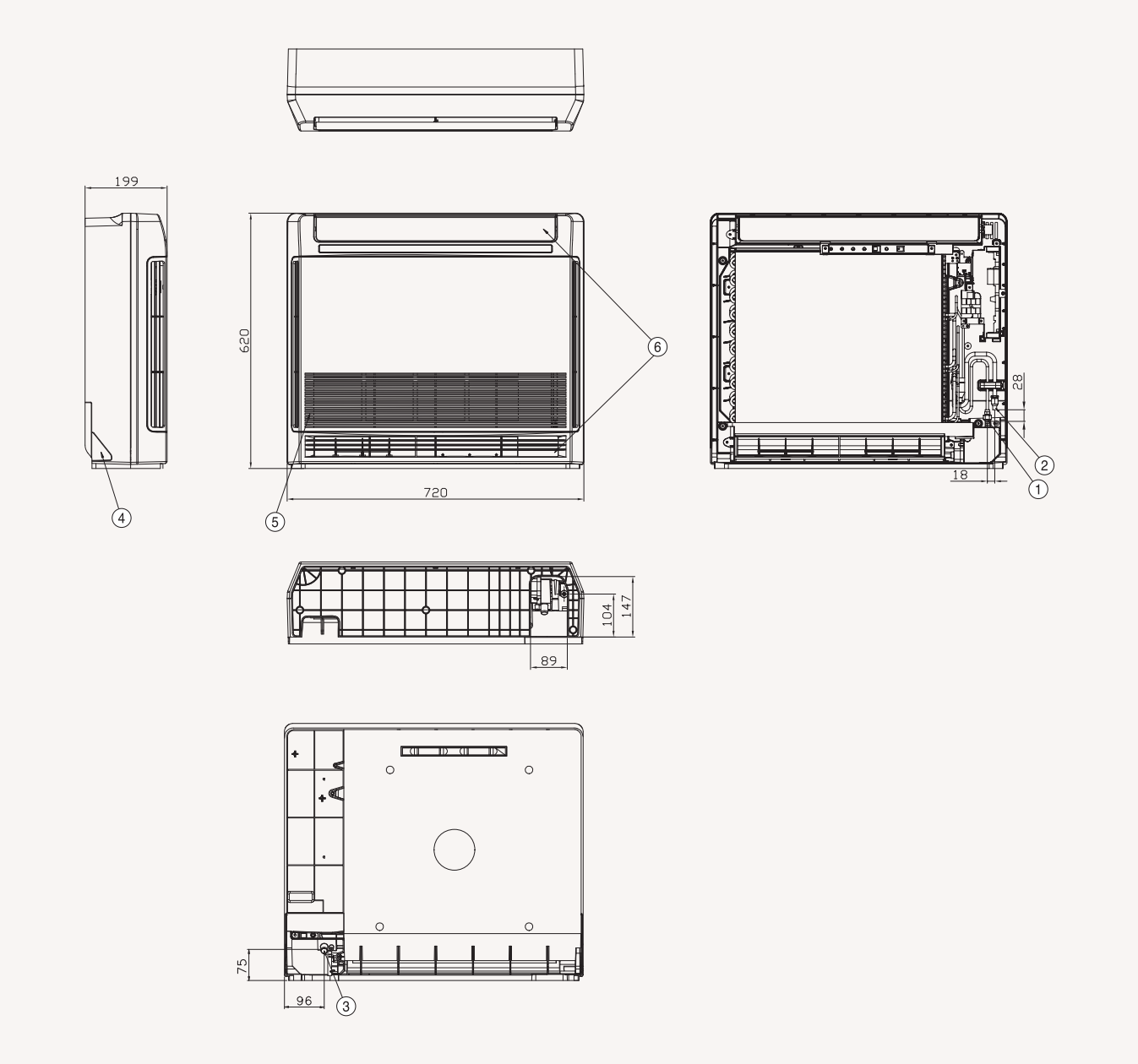

NO	Name	Description
1	Liquid pipe connection	ø6.35 Flare
2	Gas pipe connection	ø12.70 Flare
3	Drain pipe connection	ID 18 Hose
4	Power supply/communication wiring conduits	
5	Air inlet grille	
6	Air outlet louvre	

Dimensional drawings

Console

AM045KNJDEH/EU, AM056FNJDEH/EU

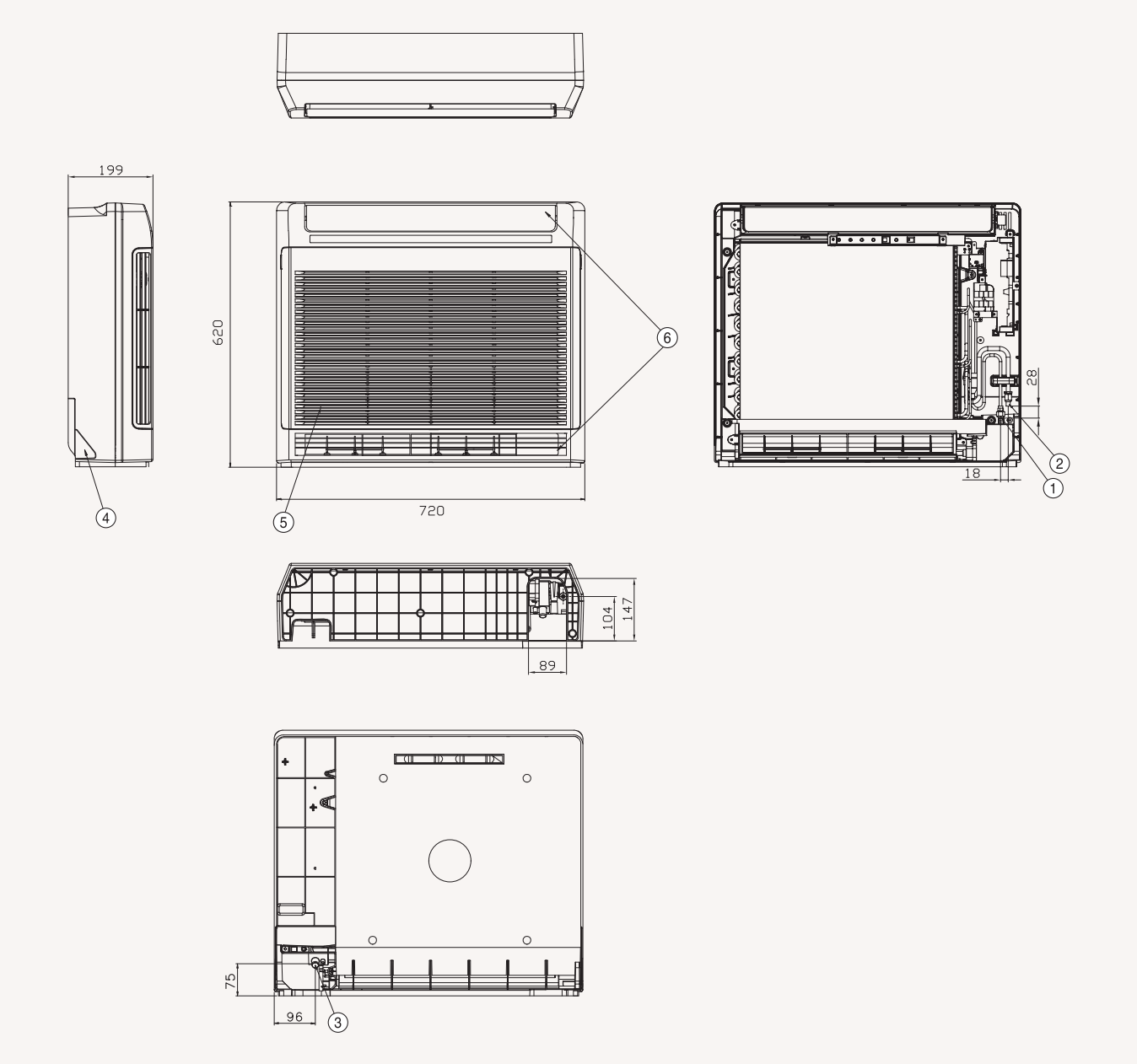

NO	Name	Description
1	Liquid pipe connection	ø6.35 Flare
2	Gas pipe connection	ø12.70 Flare
3	Drain pipe connection	ID 18 Hose
4	Power supply/communication wiring conduits	
5	Air inlet grille	
6	Air outlet louvre	

follow

Specifications

VRF

Floor/Ceiling

- Optional vertical or horizontal installation.
- Air supply by means of one adjustable blade.
- Reduced noise thanks to the remotely controlled EEV.
- Sirocco Fan direct driven by a single motor.
- Long-life washable HD 40 permanent filter is included.
- Can be controlled by Smartphone via Wi-Fi Kit (Optional).

Model				AM056FNCDEH/EU	AM071FNCDEH/EU
Power Supply			Φ, #, V, Hz	1Φ, 2, 220~240 V, 50 Hz	1Φ, 2, 220~240 V, 50 Hz
Performance	Capacity (Nominal)	Cooling	kW	5.6	7.1
		Heating	kW	6.3	8.0
Power	Power Input (Nominal)	Cooling	W	72	80
		Heating	W	72	77
	Current Input (Nominal)	Cooling	A	0.33	0.35
		Heating	A	0.28	0.29
Fan	Motor	Type	-	Sirocco Fan	Sirocco Fan
		Output	W	60	120
		Number of Fans	ea	1	1
	Airflow Rate	H/M/L (UL)	m^3/min	14.00/13.00/12.00	18.00/16.50/15.00
			l/s	233.33/216.67/200.00	300.00/275.00/250.00
Piping Connections	Liquid Pipe		ø, mm	6.35	9.52
			ø, inch	1/4	3/8
	Gas Pipe		ø, mm	12.70	15.88
			ø, inch	1/2	5/8
	Drain Pipe		ø, mm	ID 18 HOSE	ID 18 HOSE
Field Wiring	Power Source Wire	Below 20 m/ over 20 m	mm^2	1.5/2.5	1.5/2.5
	Transmission Cable		mm^2	0.75~1.50	0.75~1.50
Refrigerant	Type		-	R410A (Fluorinated greenhouse gas, GWP=2,088)	
	Control Method		-	EEV NOT INCLUDED	EEV NOT INCLUDED
Sound	Sound Pressure[1]	(H/M/L)	dB(A)	40/37/34	44/42/40
Dimensions	Net Weight		kg	21.0	21.0
	Net Dimensions (W × H × D)		mm	1,000 x 650 x 200	1,000 x 650 x 200
Air Filter			-	Long-life Filter	Long-life Filter

Accessories						
Touch Controller	Wired Remote Controller	Wi-Fi Kit	External Room Sensor	EEV Kit 1 Indoor	EEV Kit 2 Indoor	EEV Kit 3 Indoor
MWR-SH11N	MWR-WG00*N	MIM-H04EN	MRW-TA	MEV-***SA	MXD-E24/32K***A	MXD-E24/32K***A

[1] Sound pressure level is obtained in an anechoic room. Sound pressure level is a relative value, depending on the distance and acoustic environment. Sound pressure level may differ depending on operation conditions.

Dimensional drawings

Floor/Ceiling

AM***FNCDEH/EU

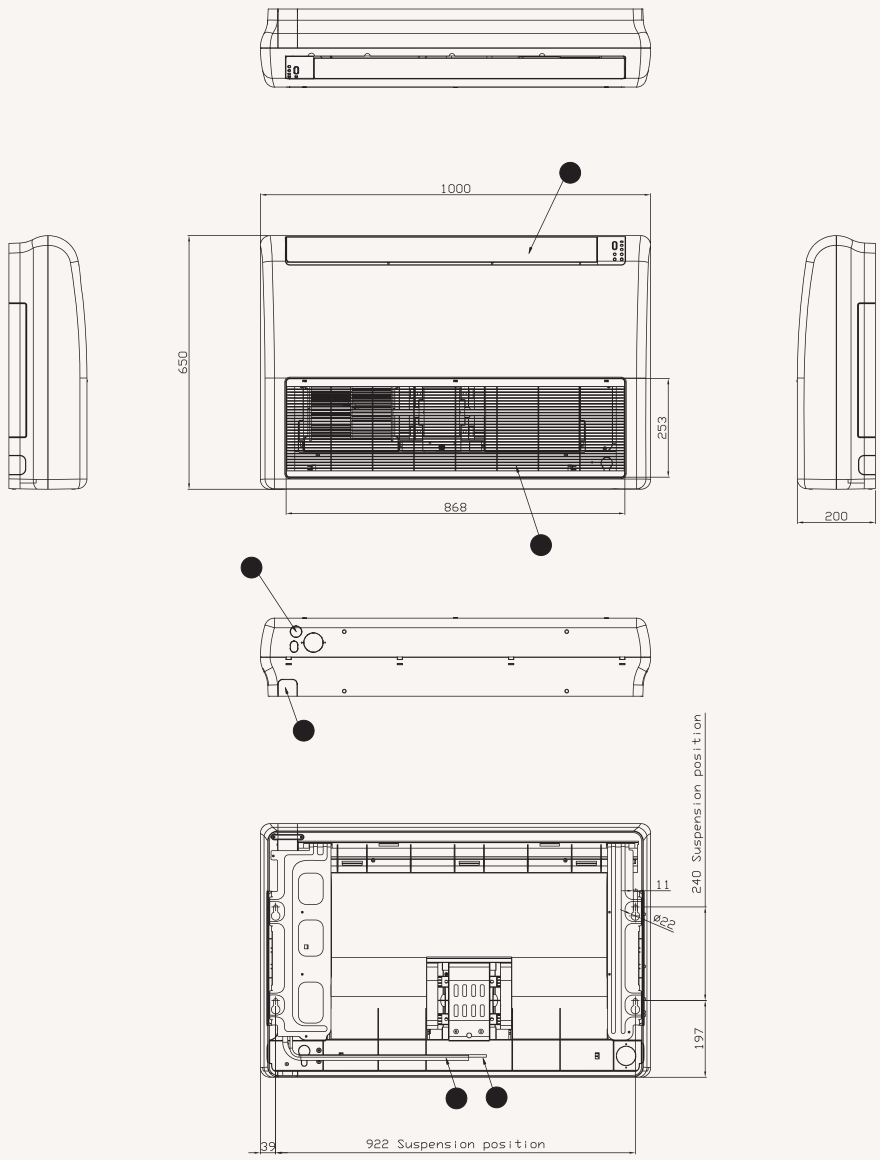

NO	Name	Description	
		5.6 kW	7.1 kW
1	Liquid pipe connection	ø6.35 Flare	ø9.52 Flare
2	Gas pipe connection	ø12.70 Flare	ø15.88 Flare
3	Drain pipe connection	ID 18 Hose	
4	Power supply/communication wiring conduits		
5	Air inlet grille		
6	Air outlet louvre		

Specifications

VRF

Big Ceiling

- Horizontal installation only.
- Air supply by means of one adjustable blade.
- Sirocco Fan direct driven by a single motor.
- Long-life washable HD 40 permanent filter is included.
- Can be controlled by Smartphone via Wi-Fi Kit (Optional).

Model				AM112JNCDKH/EU	AM140JNCDKH/EU
Power Supply			Φ, #, V, Hz	1Φ, 2, 220~240 V, 50 Hz	1Φ, 2, 220~240 V, 50 Hz
Performance	Capacity (Nominal)	Cooling	kW	11.2	14.0
		Heating	kW	12.5	16.0
Power	Power Input (Nominal)	Cooling	W	92.0	160.0
		Heating	W	80.0	160.0
	Current Input (Nominal)	Cooling	A	0.94	1.45
		Heating	A	0.83	1.45
Fan	Motor	Type	-	Sirocco Fan	Sirocco Fan
		Output	W	260 x 1	260 x 1
	Airflow Rate	H/M/L (UL)	m³/min	29.30/23.90/18.50	36.40/30.80/26.00
			l/s	488.33/398.33/308.33	606.67/513.33/433.33
Piping Connections	Liquid Pipe		ø, mm	9.52	9.52
			ø, inch	3/8	3/8
	Gas Pipe		ø, mm	15.88	15.88
			ø, inch	5/8	5/8
	Drain Pipe		ø, mm	VP25 (OD 25, ID 20)	VP25 (OD 25, ID 20)
Field Wiring	Power Source Wire	Below 20 m/over 20 m	mm²	1.5/2.5	1.5/2.5
	Transmission Cable		mm²	0.75~1.50	0.75~1.50
Refrigerant	Type		-	R410A (Fluorinated greenhouse gas, GWP=2,088)	
	Control Method		-	EEV INCLUDED	EEV INCLUDED
Sound	Sound Pressure[1]	(H/M/L)	dB(A)	45/41/37	46/43/38
	Sound Power	Cooling	dB(A)	61	63
Dimensions	Net Weight		kg	33.5	42.5
	Net Dimensions (W × H × D)		mm	1,350 x 235 x 675	1,350 x 235 x 675

Accessories			
Touch Controller	Wired Remote Controller	Wi-Fi Kit	External Room Sensor
MWR-SH11N	MWR-WG00*N	MIM-H04EN	MRW-TA

[1] Sound pressure level is obtained in an anechoic room. Sound pressure level is a relative value, depending on the distance and acoustic environment. Sound pressure level may differ depending on operation conditions.

Dimensional drawings

Big Ceiling

AM***JNCDKH/EU

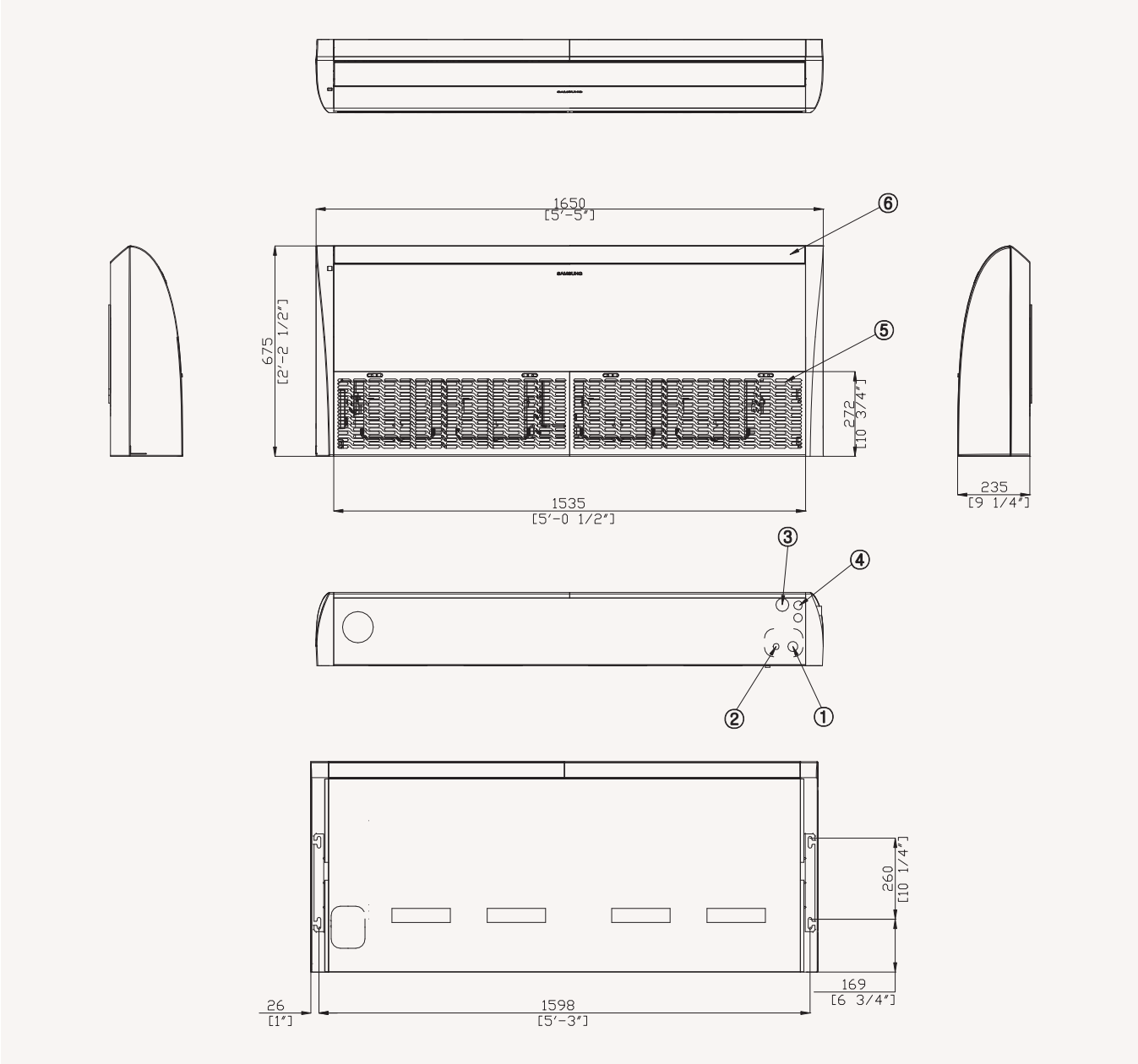

NO	Name
1	Refrigerant gas pipe
2	Refrigerant liquid pipe
3	Condensate drain
4	Power supply/communication wiring conduits
5	Air inlet grille
6	Air outlet grille

Specifications

Concealed Floor-Standing

- Silent operation.
- Sirocco fan driven by inverter motor.
- Can be controlled by Smartphone via Wi-Fi Kit.
- Long-life washable permanent filter.
- Auto Restart function.

Model				AM036FNFDEH/EU	AM056FNFDEH/EU	AM071FNFDEH/EU
Power Supply			Φ, #, V, Hz	1Φ, 2, 220~240 V, 50 Hz	1Φ, 2, 220~240 V, 50 Hz	1Φ, 2, 220~240 V, 50 Hz
Performance	Capacity (Nominal)	Cooling	kW	3.6	5.6	7.1
		Heating	kW	4.0	6.3	8.0
Power	Power Input (Nominal)	Cooling	W	50	110	110
		Heating	W	50	110	110
	Current Input (Nominal)	Cooling	A	0.24	0.53	0.53
		Heating	A	0.24	0.53	0.53
Fan	Motor	Type	-	Sirocco Fan	Sirocco Fan	Sirocco Fan
	Airflow Rate	H/M/L (UL)	m³/min	10.00/8.50/6.00	15.50/14.00/11.00	15.50/14.00/11.00
			l/s	166.67/141.67/100.00	258.33/233.33/183.33	258.33/233.33/183.33
Piping Connections	Liquid Pipe		ø, mm	6.35	9.52	9.52
			ø, inch	1/4	3/8	3/8
	Gas Pipe		ø, mm	12.70	15.88	15.88
			ø, inch	1/2	5/8	5/8
	Drain Pipe		ø, mm	ID 18 HOSE	ID 18 HOSE	ID 18 HOSE
Field Wiring	Power Source Wire	Below 20 m/ over 20 m	mm²	1.5/2.5	1.5/2.5	1.5/2.5
	Transmission Cable		mm²	0.75~1.50	0.75~1.50	0.75~1.50
Refrigerant	Type		-	R410A (Fluorinated greenhouse gas, GWP=2,088)		
	Control Method		-	EEV INCLUDED	EEV INCLUDED	EEV INCLUDED
Sound	Sound Pressure[1]	(H/M/L)	dB(A)	37/32/27	40/36/32	40/36/32
Dimensions	Net Weight		kg	23.0	28.5	28.5
	Net Dimensions (W × H × D)		mm	945 x 600 x 220	1,225 x 600 x 220	1,225 x 600 x 220
Air Filter			-	Long-life Filter	Long-life Filter	Long-life Filter

Accessories

Touch Controller	Wired Remote Controller	Wi-Fi Kit	External Room Sensor
MWR-SH11N	MWR-WG00*N	MIM-H04EN	MRW-TA

[1] Sound pressure level is obtained in an anechoic room. Sound pressure level is a relative value, depending on the distance and acoustic environment. Sound pressure level may differ depending on operation conditions.

Dimensional drawings

Concealed Floor-Standing

AM036/056/071FNFDEH/**

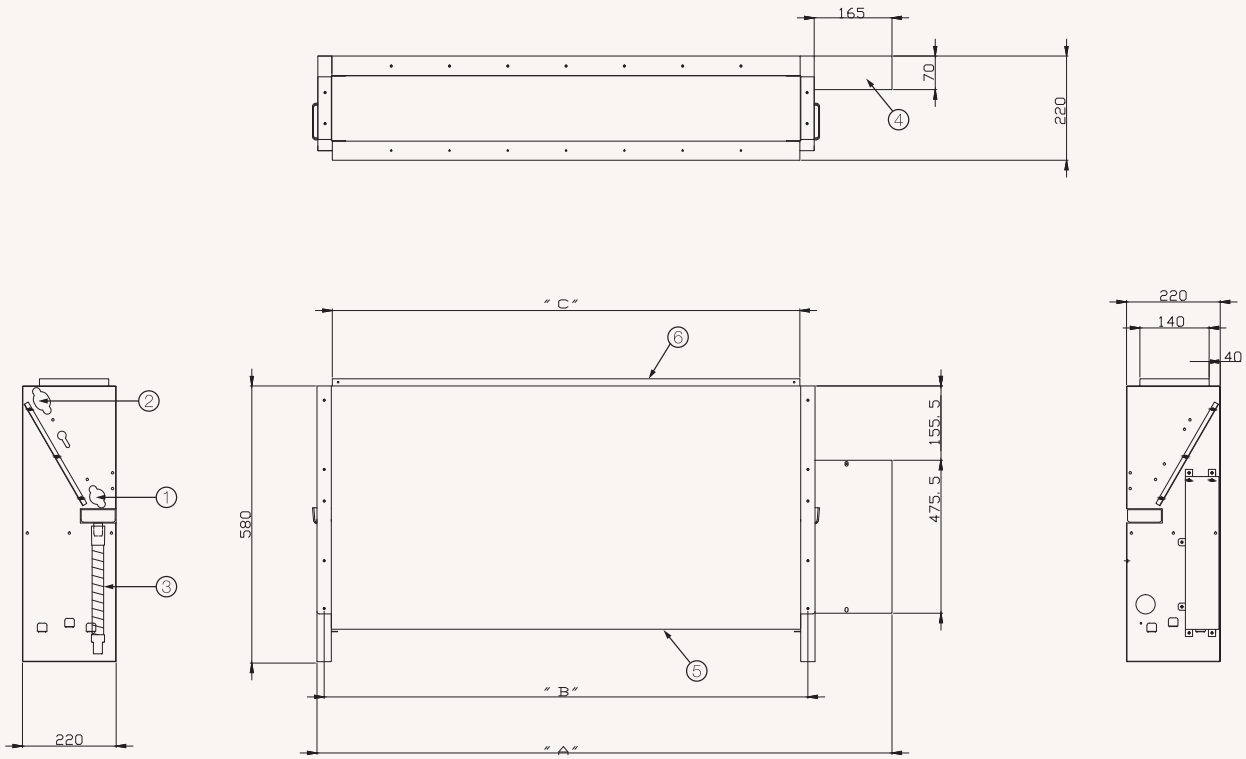

Model	A	B	C
AM036FNFDEH/EU	945	730	700
AM056/071FNFDEH/EU	1,225	1,010	980

NO	Name	Description		
		3.6 kW	5.6 kW	7.1 kW
1	Liquid pipe connection	ø6.35 Flare	ø6.35 Flare	ø9.52 Flare
2	Gas pipe connection	ø12.70 Flare	ø12.70 Flare	ø15.88 Flare
3	Drain pipe connection		ID 18 Hose	
4	Power supply/communication wiring conduits			
5	Air inlet grille			
6	Air outlet louvre			

Specifications

VRF

Concealed Floor-Standing High Static Pressure

- Silent operation.
- Sirocco fan driven by inverter motor.
- Can be controlled by Smartphone via Wi-Fi Kit.
- Long-life washable permanent filter.
- Auto Restart function.

Model				AM036MNFDEH/EU	AM056MNFDEH/EU	AM071MNFDEH/EU
Power Supply			Φ, #, V, Hz	1Φ, 2, 220~240 V, 50 Hz	1Φ, 2, 220~240 V, 50 Hz	1Φ, 2, 220~240 V, 50 Hz
Performance	Capacity (Nominal)	Cooling	kW	3.6	5.6	7.1
		Heating	kW	4.0	6.3	8.0
Power	Power Input (Nominal)	Cooling	kW	0.022	0.042	0.042
		Heating	kW	0.022	0.042	0.042
	Current Input (Nominal)	Cooling	A	0.20	0.37	0.37
		Heating	A	0.20	0.37	0.37
Fan	Motor	Type	-	Sirocco Fan	Sirocco Fan	Sirocco Fan
		Output x n	W	100 x 1	100 x 1	100 x 1
	External Static Pressure	Min/Std/Max	mmAq	0.00/3.00/6.00	0.00/3.00/6.00	0.00/3.00/6.00
		Min/Std/Max	Pa	0.00/29.40/58.90	0.00/29.40/58.90	0.00/29.40/58.90
	Airflow Rate	(H/M/L)	m³/h	600/510/360	930/840/660	930/840/660
Piping Connections	Liquid Pipe		ø, mm	6.35	6.35	9.52
			ø, inch	1/4	1/4	3/8
	Gas Pipe		ø, mm	12.70	12.70	15.88
			ø, inch	1/2	1/2	5/8
	Drain Pipe		ø, mm	ID 18 HOSE	ID 18 HOSE	ID 18 HOSE
Field Wiring	Power Source Wire		mm²	1.5~2.5	1.5~2.5	1.5~2.5
	Transmission Cable		mm²	0.75~1.50	0.75~1.50	0.75~1.50
Refrigerant	Type		-	R410A (Fluorinated greenhouse gas, GWP=2,088)		
	Control Method		-	EEV INCLUDED	EEV INCLUDED	EEV INCLUDED
Sound	Sound Pressure[1]	(H/M/L)	dB(A)	37/32/27	40/36/32	40/36/32
	Sound Power		dB(A)	53.0	59.0	59.0
Dimensions	Net Weight		kg	22.0	27.0	27.0
	Net Dimensions (W x H x D)		mm	945 x 600 x 220	1,225 x 600 x 220	1,225 x 600 x 220
Air Filter			-	Long-life Filter	Long-life Filter	Long-life Filter

Accessories			
Touch Controller	Wired Remote Controller	Wi-Fi Kit	External Room Sensor
MWR-SH11N	MWR-WG00*N	MIM-H04EN	MRW-TA

[1] Sound pressure level is obtained in an anechoic room. Sound pressure level is a relative value, depending on the distance and acoustic environment. Sound pressure level may differ depending on operation conditions.

Dimensional drawings

Concealed Floor-Standing High Static Pressure

AM036/056/071FNFDEH/**

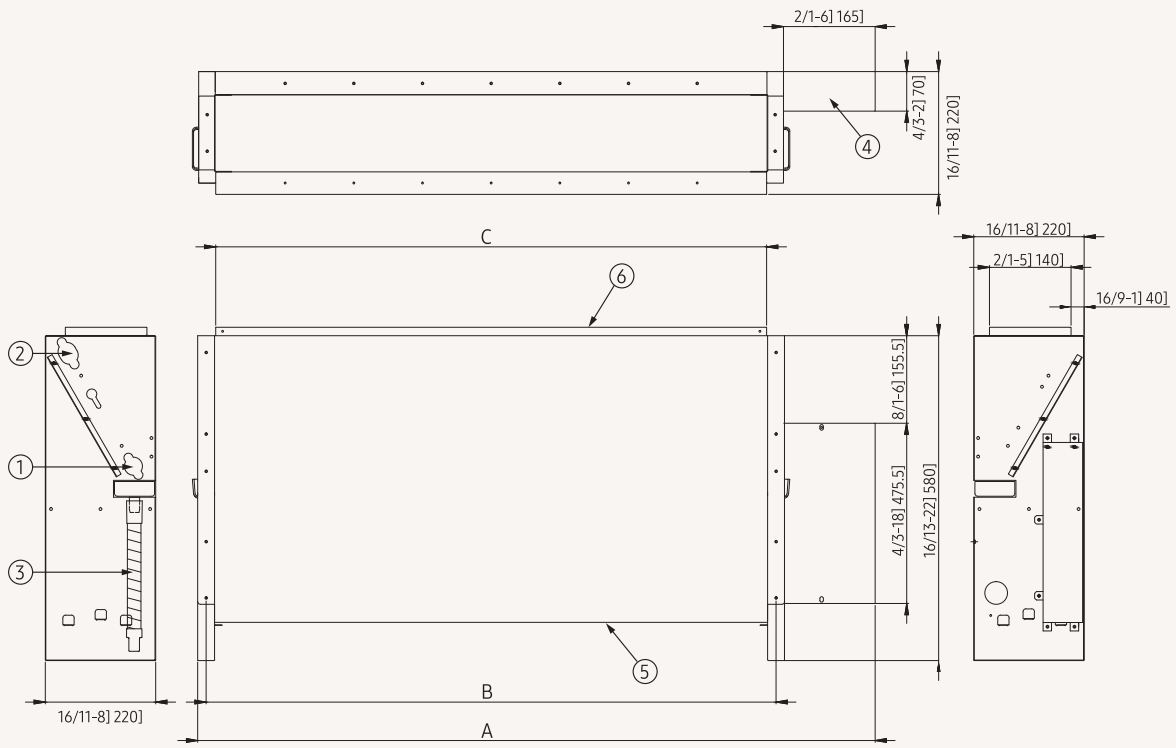

Model	A	B	C
AM036MNFDEH/EU	945	730	700
AM056/071MNFDEH/EU	1,225	1,010	980

NO	Name	Description		
		3.6 kW	5.6 kW	7.1 kW
1	Liquid pipe connection	ø6.35 Flare	ø6.35 Flare	ø9.52 Flare
2	Gas pipe connection	ø12.70 Flare	ø12.70 Flare	ø15.88 Flare
3	Drain pipe connection		ID 18 Hose	
4	Power supply/communication wiring conduits			
5	Air inlet grille			
6	Air outlet louvre			

Specifications

Packaged Floor-Standing

- Sirocco fan driven by inverter motor.
- Can be controlled by Smartphone via Wi-Fi Kit.

Model				AM140RNPDKH/EU	AM280RNPDKH/EU
Power Supply			Φ, #, V, Hz	1Φ, 2, 220~240 V, 50/60 Hz	1Φ, 2, 220~240 V, 50 Hz
Performance	Capacity (Nominal)	Cooling	kW	14	28
		Heating	kW	16	31.5
Power	Power Input (Nominal)	Cooling	W	190	955
		Heating	W	190	955
	Current Input (Nominal)	Cooling	A	0.90	4.73
		Heating	A	0.90	4.73
Fan	Motor	Type	-	Sirocco Fan	Sirocco Fan
		Output x n	W	154 x 1	700 x 1
	Airflow Rate	H/M/L (UL)	m³/min	35.00/30.50/27.50	70.00/60.00/50.00
			l/s	583.33/508.33/458.33	1,166.67/1,000.00/833.33
Piping Connections	Liquid Pipe		ø, mm	9.52	9.52
			ø, inch	3/8	3/8
	Gas Pipe		ø, mm	15.88	22.22
			ø, inch	5/8	7/8
	Drain Pipe		ø, mm	ID 18 HOSE	VP25 (OD 32, ID 25)
Field Wiring	Power Source Wire		mm²	2.5	2.5
	Transmission Cable		mm²	VCTF 0.75~1.50	VCTF 0.75~1.50
Refrigerant	Type		-	R410A (Fluorinated greenhouse gas, GWP=2,088)	
	Control Method		-	EEV INCLUDED	EEV INCLUDED
Sound	Sound Pressure[1]	(H/L)	dB(A)	54/47	58/54
	Sound Power	Cooling	dB(A)	-	-
Dimension	Net Weight		kg	48.0	115.0
	Net Dimensions (W x H x D)		mm	650 x 1,850 x 400	1,100 x 1,800 x 485

Accessories	
Wi-Fi Kit	External Room Sensor
MIM-H04EN	MRW-TA

[1] Sound pressure level is obtained in an anechoic room. Sound pressure level is a relative value, depending on the distance and acoustic environment. Sound pressure level may differ depending on operation conditions.

Dimensional drawings

Packaged Floor-Standing

AM140RNPDKH/EU

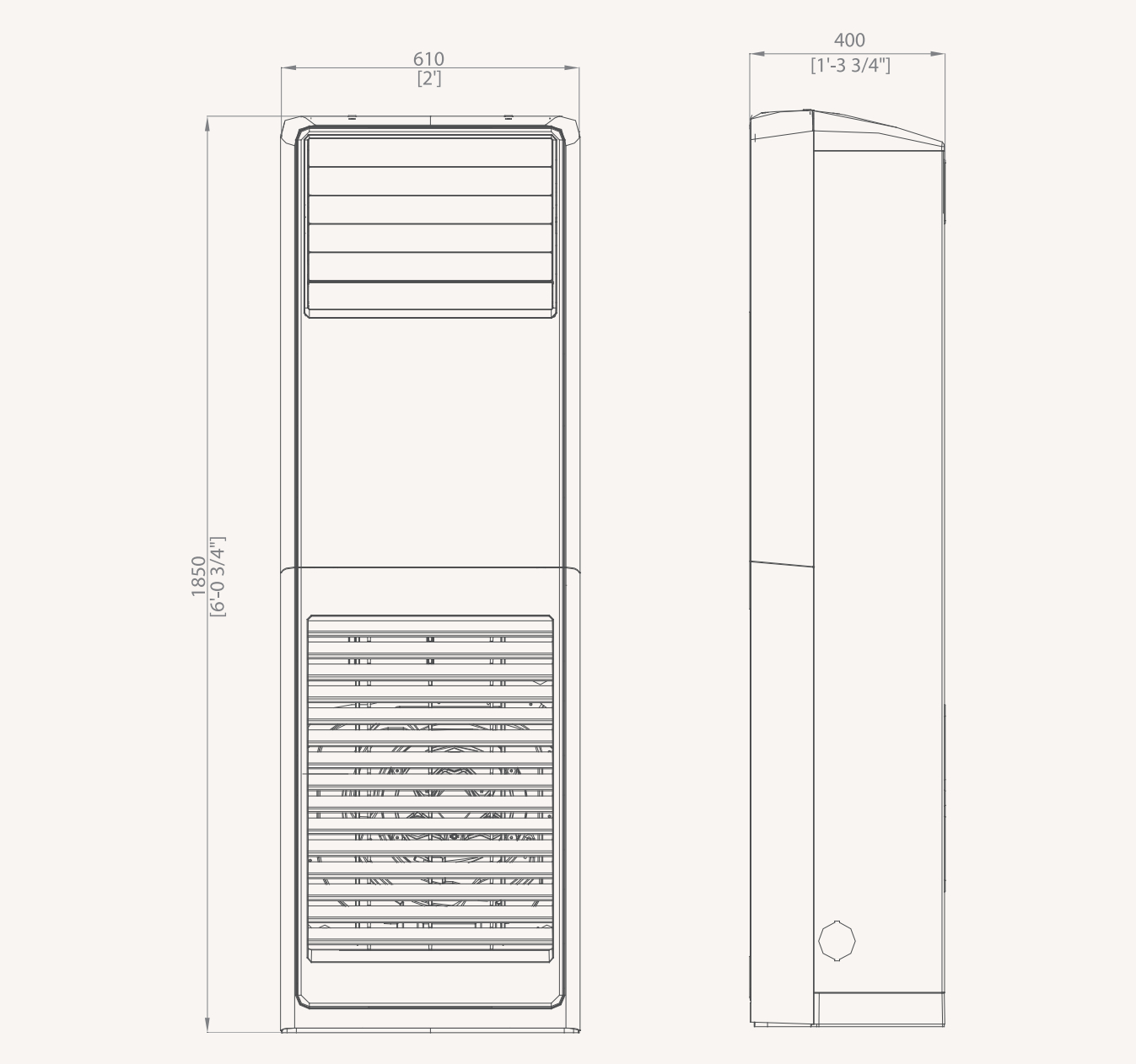

NO	Name	Description
1	Gas piping refrigerant	ø15.88 (5/8)
2	Liquid piping refrigerant	ø9.52 (3/8)
3	Condensation drain piping	-

Dimensional drawings

Packaged Floor-Standing

AM280RNPDKH/EU

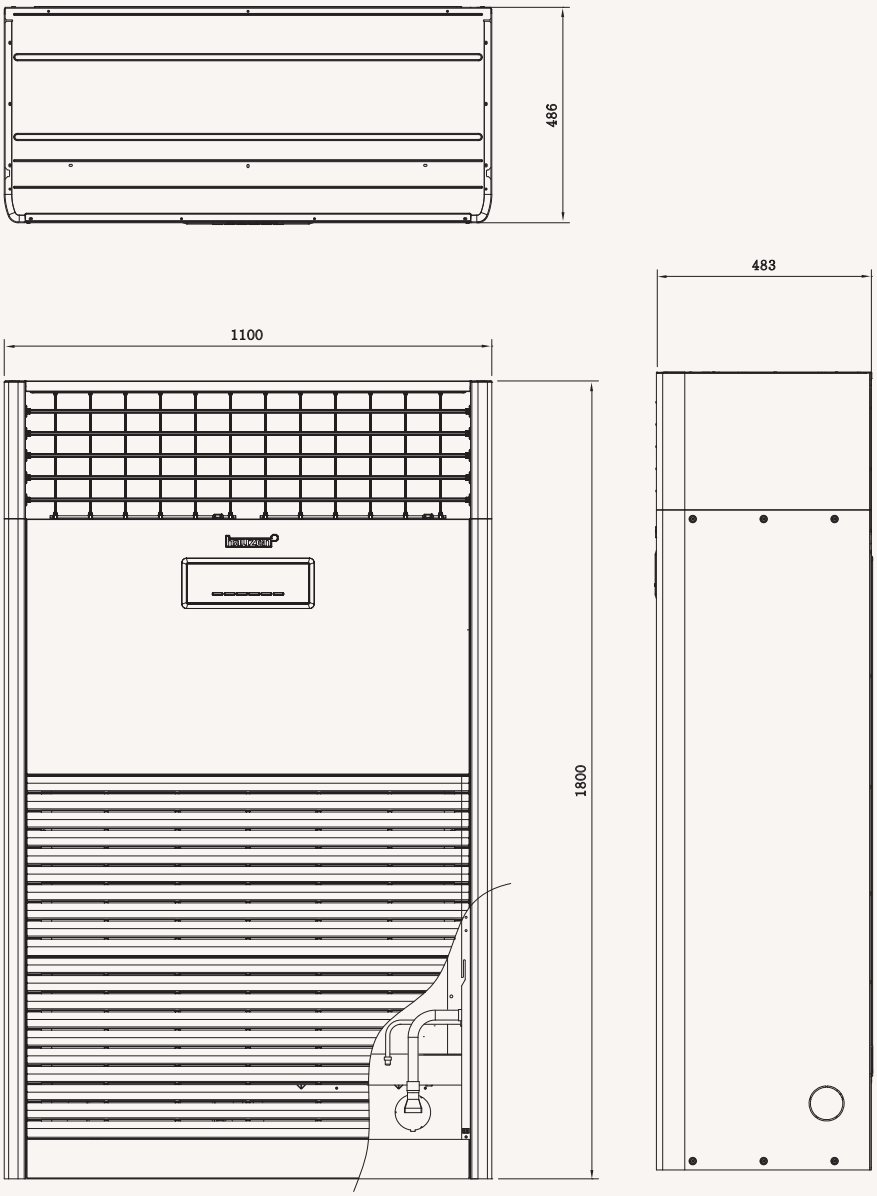

NO	Name	Description
1	Refrigerant gas pipe	ø22.22 (7/8) Flare
2	Refrigerant liquid pipe	ø9.52 (3/8) Flare
3	Drain pipe connection	VP25 (OD 32, ID 25)

SAMSUNG

Specifications

VRF

Boracay Wall-Mounted (EEV excluded)

- Motorised louvre provides an automatic change in airflow by directing the air up and down.
- Manual adjustable guide vane allows users to change the airflow from side to side (left to right).
- Turbo function provides fast and powerful cooling.
- Cross-flow fan direct driven by a single motor.
- Washable pre filter.
- Four-direction drain and refrigerant piping connection as standard.

Model				AM015KNTDEH/EU	AM022KNTDEH/EU	AM028KNTDEH/EU
Power Supply			Φ, #, V, Hz	1Φ, 2, 220~240 V, 50 Hz	1Φ, 2, 220~240 V, 50 Hz	1Φ, 2, 220~240 V, 50 Hz
Performance		Cooling	kW	1.5	2.2	2.8
		Heating	kW	1.7	2.5	3.2
Power	Power Input (Nominal)	Cooling	W	32.0	32.0	38.0
		Heating	W	34.0	35.0	39.0
	Current Input (Nominal)	Cooling	A	0.20	0.20	0.22
		Heating	A	0.20	0.20	0.22
	MCA		A	0.3	0.3	0.4
	MFA		A	15.0	15.0	15.0
Fan	Type		-	Crossflow Fan	Crossflow Fan	Crossflow Fan
	Number of Fans		ea	1	1	1
	Airflow Rate	H/M/L (UL)	m³/min	6.2/5.7/5.1	6.6/5.7/5.1	7.0/6.2/5.5
			l/s	103.3/95.0/85.0	110.0/95.0/85.0	116.7/103.3/91.7
Fan motor	Type		-	SSR Feedback	SSR Feedback	SSR Feedback
	Output x n		W	19 x 1	19 x 1	19 x 1
Piping Connections	Liquid Pipe		ø, mm	6.35	6.35	6.35
			ø, inch	1/4	1/4	1/4
	Gas Pipe		ø, mm	12.7	12.7	12.7
			ø, inch	1/2	1/2	1/2
	Drain Pipe		ø, mm	ID 18 HOSE	ID 18 HOSE	ID 18 HOSE
Field Wiring	Power Source Wire	Minimum	mm²	1.5	1.5	1.5
	For connection with indoor	Minimum	mm²	0.75	0.75	0.75
		Remark	-	F1, F2	F1, F2	F1, F2
Refrigerant	Type		-	R410A (Fluorinated greenhouse gas, GWP=2,088)		
	Control Method		-	EEV NOT INCLUDED	EEV NOT INCLUDED	EEV NOT INCLUDED
Sound	Sound Pressure[1]	H/M/L	dB(A)	30/28/25	31/28/25	31/29/26
	Sound Power	Cooling	dB(A)	47	48	48
Dimensions	Net Weight		kg	8.0	8.0	8.5
	Net Dimensions (W × H × D)		mm	820 x 285 x 227	820 x 285 x 227	820 x 285 x 227
Air Filter			-	Pre filter	Pre filter	Pre filter

Accessories

Wireless Remote Controller	Touch Controller	Wired Remote Controller	Wi-Fi Kit	External Room Sensor	EEV Kit 1 Indoor	EEV Kit 2 Indoor	EEV Kit 3 Indoor
AR-EH03E	MWR-SH11N	MWR-WG00*N	MIM-H04EN	MRW-TA	MEV-***SA	MXD-E24/32K***A	MXD-E24/32K***A

[1] Sound pressure level is obtained in an anechoic room. Sound pressure level is a relative value, depending on the distance and acoustic environment. Sound pressure level may differ depending on operation conditions.

AM036KNTDEH/EU	AM045KNTDEH/EU	AM056KNTDEH/EU	AM071KNTDEH/EU
1Φ, 2, 220~240 V, 50 Hz	1Φ, 2, 220~240 V, 50 Hz	1Φ, 2, 220~240 V, 50 Hz	1Φ, 2, 220~240 V, 50 Hz
3.6	4.5	5.6	6.8
4.0	5.0	6.3	7.0
42.0	47.0	48.0	51.0
42.0	47.0	48.0	53.0
0.23	0.27	0.27	0.28
0.23	0.27	0.27	0.28
0.4	0.4	0.4	0.4
15.0	15.0	15.0	15.0
Crossflow Fan	Crossflow Fan	Crossflow Fan	Crossflow Fan
1	1	1	1
8.5/7.5/6.6	13.9/12.4/11.2	14.4/12.9/11.2	15.7/14.1/12.9
141.7/125.0/110.0	231.7/206.7/186.7	240.0/215.0/186.7	261.7/235.0/215.0
SSR Feedback	SSR Feedback	SSR Feedback	SSR Feedback
19 x 1	28 x 1	28 x 1	28 x 1
6.35	6.35	6.35	9.52
1/4	1/4	1/4	3/8
12.7	6.35	6.35	9.52
1/2	1/2	1/2	5/8
ID 18 HOSE	ID 18 HOSE	ID 18 HOSE	ID 18 HOSE
1.5	1.5	1.5	1.5
0.75	0.75	0.75	0.75
F1, F2	F1, F2	F1, F2	F1, F2
R410A (Fluorinated greenhouse gas, GWP=2,088)			
EEV NOT INCLUDED	EEV NOT INCLUDED	EEV NOT INCLUDED	EEV NOT INCLUDED
36/33/29	38/35/33	39/36/33	40/38/35
51	53	53	55
8.5	12.0	12.0	12.0
820 x 285 x 227	1,065 x 298 x 243	1,065 x 298 x 243	1,065 x 298 x 243
Pre filter	Pre filter	Pre filter	Pre filter

Dimensional drawings

Boracay Wall-Mounted (EEV excluded)

AM015/022/028/036KNTD****

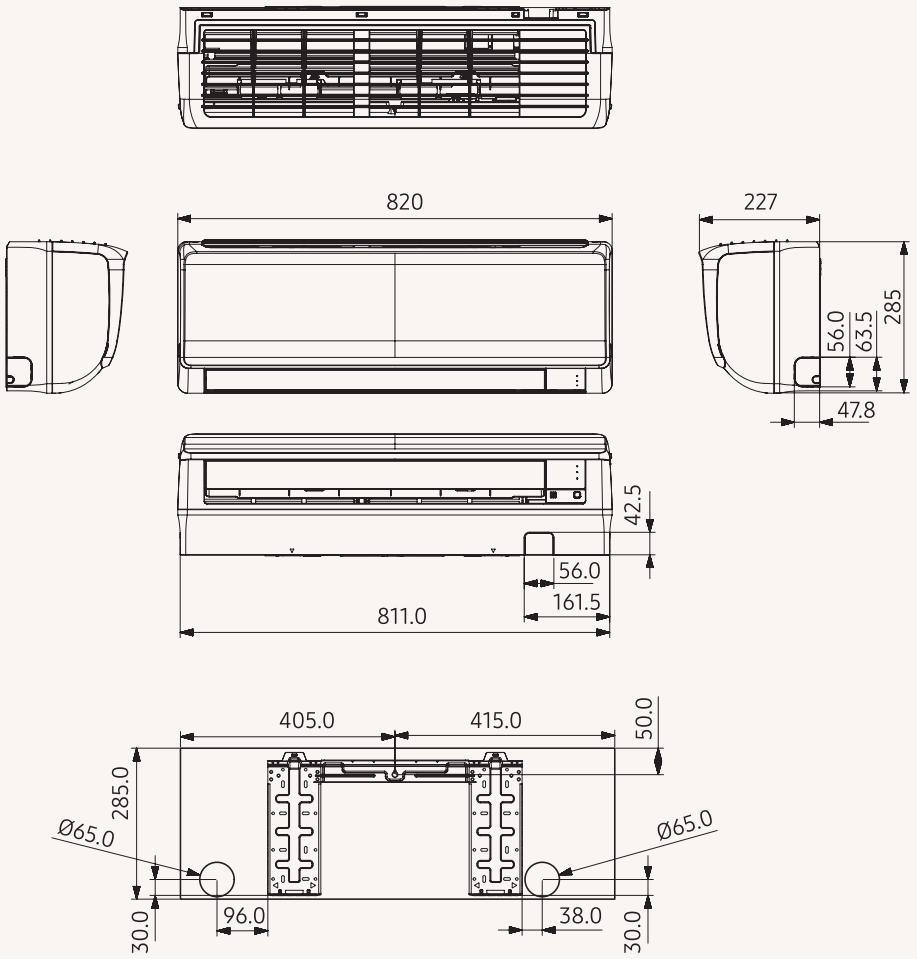

NO	Name	Description
1	Liquid pipe connection	ø6.35 (1/4)
2	Gas pipe connection	ø12.70 (1/2)
3	Drain pipe connection	ID 18 HOSE
4	Power supply/communication wiring conduits	-

AM045/056/071KNTD*****

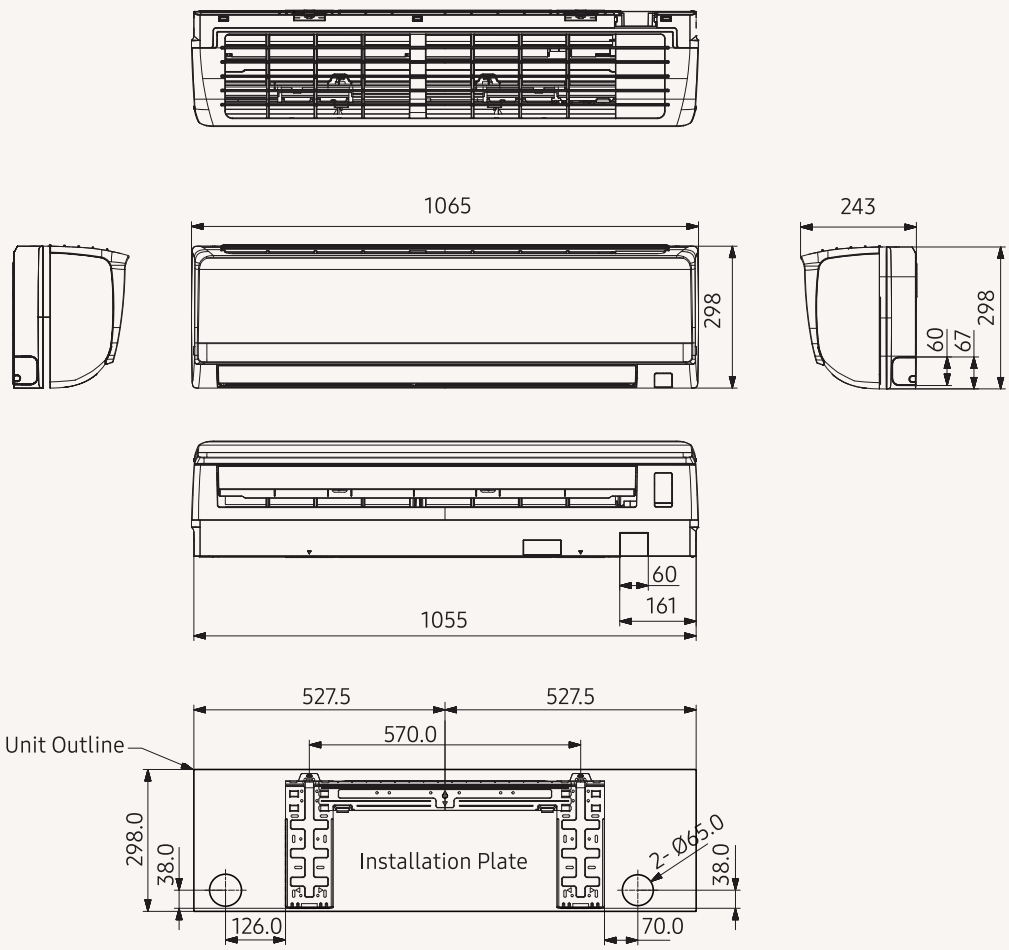

NO	Name	Description
1	Liquid pipe connection	ø6.35 (1/4)
2	Gas pipe connection	ø12.70 (1/2)
3	Drain pipe connection	ID 18 HOSE
4	Power supply/communication wiring conduits	-

Specifications

Boracay Wall-Mounted (EEV included)

- Motorised louvre provides an automatic change in airflow by directing the air up and down.
- Manual adjustable guide vane allows users to change the airflow from side to side (left to right).
- Turbo function provides fast and powerful cooling.
- Cross-flow fan direct driven by a single motor.
- Washable pre filter.
- Four-direction drain and refrigerant piping connection as standard.

Model				AM015KNQDEH/EU	AM022KNQDEH/EU	AM028KNQDEH/EU
Power Supply			Φ, #, V, Hz	1Φ, 2, 220~240 V, 50 Hz	1Φ, 2, 220~240 V, 50 Hz	1Φ, 2, 220~240 V, 50 Hz
Performance		Cooling	kW	1.5	2.2	2.8
		Heating	kW	1.7	2.5	3.2
Power	Power Input (Nominal)	Cooling	W	32.0	32.0	38.0
		Heating	W	34.0	35.0	39.0
	Current Input (Nominal)	Cooling	A	0.20	0.20	0.22
		Heating	A	0.20	0.20	0.22
	MCA		A	0.3	0.3	0.4
	MFA		A	15.0	15.0	15.0
Fan	Type		-	Crossflow Fan	Crossflow Fan	Crossflow Fan
	Number of Fans		ea	1	1	1
	Airflow Rate	H/M/L (UL)	m³/min	6.2/5.7/5.1	6.6/5.7/5.1	7.0/6.2/5.5
			l/s	103.3/95.0/85.0	110.0/95.0/85.0	116.7/103.3/91.7
Fan motor	Type		-	SSR Feedback	SSR Feedback	SSR Feedback
	Output x n		W	19 x 1	19 x 1	19 x 1
Piping Connections	Liquid Pipe		ø, mm	6.35	6.35	6.35
			ø, inch	1/4	1/4	1/4
	Gas Pipe		ø, mm	12.7	12.7	12.7
			ø, inch	1/2	1/2	1/2
	Drain Pipe		ø, mm	ID 18 HOSE	ID 18 HOSE	ID 18 HOSE
	Heat Insulation		-	Both liquid and gas pipes	Both liquid and gas pipes	Both liquid and gas pipes
Field Wiring	Power Source Wire	Minimum	mm²	1.5	1.5	1.5
	For connection with indoor	Minimum	mm²	0.75	0.75	0.75
		Remark	-	F1, F2	F1, F2	F1, F2
Refrigerant	Type		-	R410A (Fluorinated greenhouse gas, GWP=2,088)		
	Control Method		-	EEV INCLUDED	EEV INCLUDED	EEV INCLUDED
Sound	Sound Pressure[1]	H/M/L	dB(A)	30/28/25	31/28/25	31/29/26
	Sound Power	Cooling	dB(A)	47	48	48
Dimensions	Net Weight		kg	8.5	8.5	9.0
	Net Dimensions (W × H × D)		mm	820 x 285 x 227	820 x 285 x 227	820 x 285 x 227
Air Filter			-	Pre filter	Pre filter	Pre filter

Accessories				
Wireless Remote Controller	Touch Controller	Wired Remote Controller	Wi-Fi Kit	External Room Sensor
AR-EH03E	MWR-SH11N	MWR-WG00*N	MIM-H04EN	MRW-TA

[1] Sound pressure level is obtained in an anechoic room. Sound pressure level is a relative value, depending on the distance and acoustic environment. Sound pressure level may differ depending on operation conditions.

AM036KNQDEH/EU	AM045KNQDEH/EU	AM056KNQDEH/EU	AM071KNQDEH/EU
1Φ, 2, 220–240 V, 50 Hz	1Φ, 2, 220–240 V, 50 Hz	1Φ, 2, 220–240 V, 50 Hz	1Φ, 2, 220–240 V, 50 Hz
3.6	4.5	5.6	6.8
4.0	5.0	6.3	7.0
42.0	47.0	48.0	51.0
42.0	47.0	48.0	53.0
0.23	0.27	0.27	0.28
0.23	0.27	0.27	0.28
0.4	0.4	0.4	0.4
15.0	15.0	15.0	15.0
Crossflow Fan	Crossflow Fan	Crossflow Fan	Crossflow Fan
1	1	1	1
8.5/7.5/6.6	13.9/12.4/11.2	14.4/12.9/11.2	15.7/14.1/12.9
141.7/125.0/110.0	231.7/206.7/186.7	240.0/215.0/186.7	261.7/235.0/215.0
SSR Feedback	SSR Feedback	SSR Feedback	SSR Feedback
19 x 1	28 x 1	28 x 1	28 x 1
6.35	6.35	6.35	9.52
1/4	1/4	1/4	3/8
12.7	12.7	12.7	15.88
1/2	1/2	1/2	5/8
ID 18 HOSE	ID 18 HOSE	ID 18 HOSE	ID 18 HOSE
Both liquid and gas pipes	Both liquid and gas pipes	Both liquid and gas pipes	Both liquid and gas pipes
1.5	1.5	1.5	1.5
0.75	0.75	0.75	0.75
F1, F2	F1, F2	F1, F2	F1, F2
R410A (Fluorinated greenhouse gas, GWP=2,088)			
EEV INCLUDED	EEV INCLUDED	EEV INCLUDED	EEV INCLUDED
36/33/29	38/35/33	39/36/33	40/38/35
51	53	53	55
9.0	12.5	12.5	12.5
820 x 285 x 227	1,065 x 298 x 243	1,065 x 298 x 243	1,065 x 298 x 243
Pre filter	Pre filter	Pre filter	Pre filter

Dimensional drawings

Boracay Wall-Mounted (EEV included)

AM015/022/028/036KNQD****

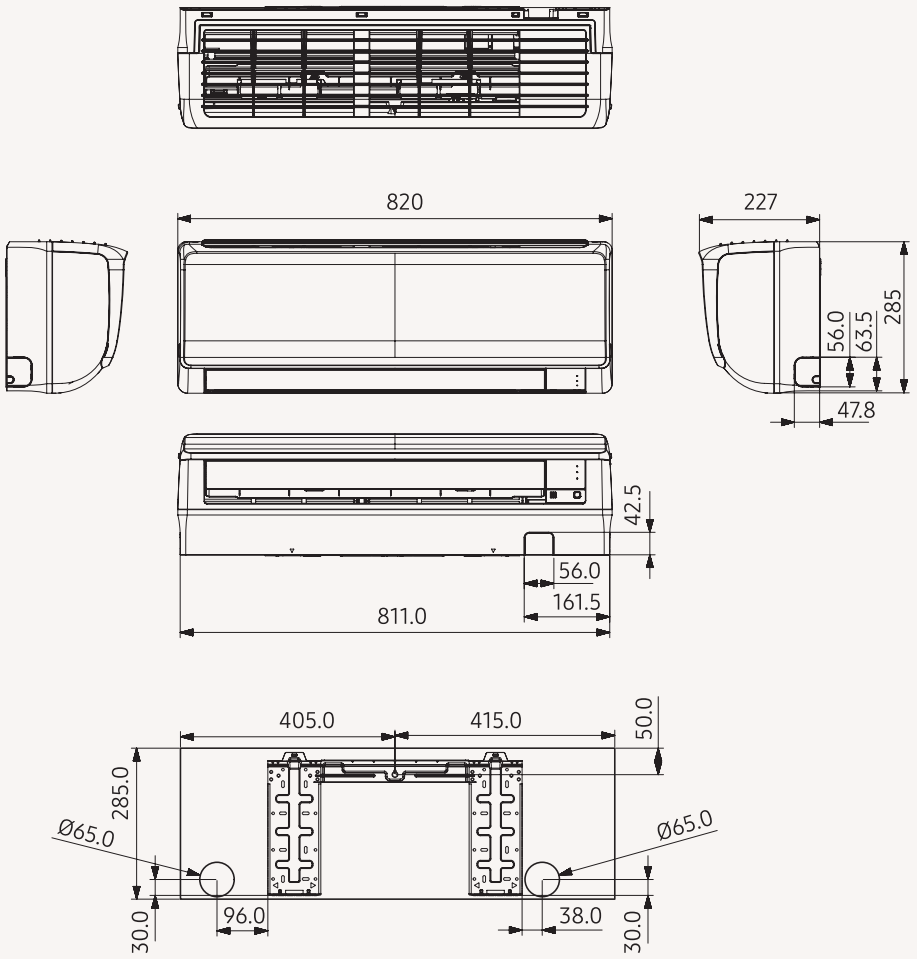

NO	Name	Description
1	Liquid pipe connection	ø6.35 (1/4)
2	Gas pipe connection	ø12.70 (1/2)
3	Drain pipe connection	ID 18 HOSE
4	Power supply/communication wiring conduits	-

AM045/056/071KNQD*****

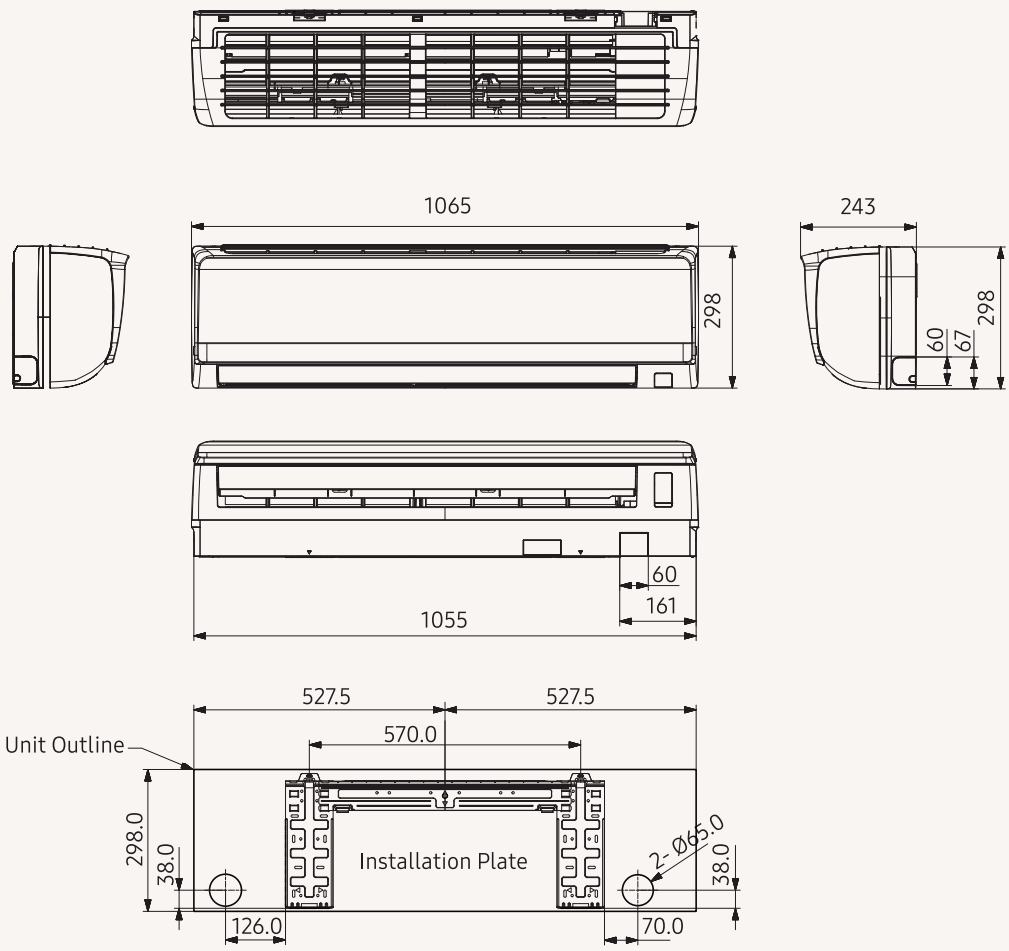

NO	Name	Description
1	Liquid pipe connection	ø6.35 (1/4)
2	Gas pipe connection	ø12.70 (1/2)
3	Drain pipe connection	ID 18 HOSE
4	Power supply/communication wiring conduits	-

Specifications

WindFree™ Deluxe (EEV included)

- Three-step cooling: Fast Cooling mode, Dehumidification mode and WindFree™ Cooling mode.
- Wi-Fi Control with SmartThings and Bixby voice controls.
- Equipped with Easy Filter Plus.

				AM015TNVDKH/EU	AM022TNVDKH/EU	AM028TNVDKH/EU
Power Supply			Φ, #, V, Hz	1Φ, 2, 220~240 V, 50/60 Hz	1Φ, 2, 220~240 V, 50/60 Hz	1Φ, 2, 220~240 V, 50/60 Hz
Performance	Capacity (Nominal)	Cooling	kW	1.5	2.2	2.8
		Heating	kW	1.7	2.5	3.2
Power	Capacity (Nominal)	Cooling	W	20	24	30
		Heating	W	20	24	30
	Current Input (Nominal)	Cooling	A	0.13	0.16	0.20
		Heating	A	0.13	0.16	0.20
	MCA		A	0.2	0.2	0.3
	MFA		A	15	15	15
Fan	Motor	Type	-	Crossflow Fan	Crossflow Fan	Crossflow Fan
		Output	W	27 x 1	27 x 1	27 x 1
	Airflow Rate	H/M/L (UL)	m³/min	4.9/4.5/4.1	5.7/5.0/4.5	8.5/7.7/6.9
			l/s	81.7/75.0/68.3	95.0/83.3/75.0	141.7/128.3/115.0
Piping Connections	Liquid Pipe		ø, mm	6.35	6.35	6.35
			ø, inch	1/4	1/4	1/4
	Gas Pipe		ø, mm	12.70	12.70	12.70
			ø, inch	1/2	1/2	1/2
	Drain Pipe		ø, mm	ID 18 HOSE	ID 18 HOSE	ID 18 HOSE
Field Wiring	Power Source Wire		mm²	1.5/2.5	1.5/2.5	1.5/2.5
	Transmission Cable		mm²	0.75~1.50	0.75~1.50	0.75~1.50
	Remark		-	F1, F2	F1, F2	F1, F2
Refrigerant	Type		-	R410A (Fluorinated greenhouse gas, GWP = 2,088)		
	Control Method		-	EEV INCLUDED	EEV INCLUDED	EEV INCLUDED
Sound	Sound Pressure[1]	(H/M/L)	dB(A)	31/30/27/26 (WindFree™)	34/32/30/27 (WindFree™)	34/33/32/26 (WindFree™)
	Sound Power	Cooling	dB(A)	50	51	52
Dimensions	Net Weight		kg	9.0	9.0	9.5
	Net Dimensions (W × H × D)		mm	820 x 299 x 215	820 x 299 x 215	820 x 299 x 215
Air Filter			-	Easy Filter Plus	Long-life Filter	Long-life Filter

Accessories

Wireless Remote Controller	Touch Controller	Wired Remote Controller	Wi-Fi Kit
AR-EH03E	MWR-SH11N	MWR-WG00*N	MIM-H04EN

[1] Sound pressure level is obtained in an anechoic room. Sound pressure level is a relative value, depending on the distance and acoustic environment. Sound pressure level may differ depending on operation conditions.

AM036TNVDKH/EU	AM045TNVDKH/EU	AM056TNVDKH/EU	AM071TNVDKH/EU	AM082TNVDKH/EU
1Φ, 2, 220~240 V, 50/60 Hz	1Φ, 2, 220~240 V, 50/60 Hz	1Φ, 2, 220~240 V, 50/60 Hz	1Φ, 2, 220~240 V, 50/60 Hz	1Φ, 2, 220~240 V, 50/60 Hz
3.6	4.5	5.6	6.8	8.2
4.0	5.0	6.3	7.0	8.5
37	40	52	60	65
37	40	52	60	65
0.25	0.27	0.35	0.40	0.43
0.25	0.27	0.35	0.40	0.43
0.3	0.3	0.4	0.5	0.5
15	15	15	15	15
Crossflow Fan	Crossflow Fan	Crossflow Fan	Crossflow Fan	Crossflow Fan
27 x 1	27 x 1	27 x 1	27 x 1	27 x 1
10.3/9.1/8.3	12.5/11.4/10.5	15.7/13.8/12.0	16.8/15.0/13.2	17.5/15.6/13.8
171.7/151.7/138.3	208.3/190.0/175.0	261.7/230.0/200.0	280.0/250.0/220.0	291.7/260.0/230.0
6.35	6.35	6.35	9.52	9.52
1/4	1/4	1/4	3/8	3/8
12.70	12.70	12.70	15.88	15.88
1/2	1/2	1/2	5/8	5/8
ID 18 HOSE	ID 18 HOSE	ID 18 HOSE	ID 18 HOSE	ID 18 HOSE
1.5/2.5	1.5/2.5	1.5/2.5	1.5/2.5	1.5/2.5
0.75~1.50	0.75~1.50	0.75~1.50	0.75~1.50	0.75~1.50
F1, F2	F1, F2	F1, F2	F1, F2	F1, F2
R410A (Fluorinated greenhouse gas, GWP = 2,088)				
EEV INCLUDED	EEV INCLUDED	EEV INCLUDED	EEV INCLUDED	EEV INCLUDED
40/36/34/26 (WindFree™)	37/34/33/29 (WindFree™)	40/37/34/29 (WindFree™)	43/40/37/29 (WindFree™)	46/45/43/30 (WindFree™)
56	55	58	62	64
9.5	12.0	12.0	12.0	13.0
820 x 299 x 215	1055 x 299 x 215	1055 x 299 x 215	1055 x 299 x 215	1055 x 299 x 215
Long-life Filter	Long-life Filter	Long-life Filter	Long-life Filter	Long-life Filter

Dimensional drawings

WindFree™ Deluxe (EEV included)

AM015TNVDKH/EU, AM022TNVDKH/EU, AM028TNVDKH/EU, AM036TNVDKH/EU

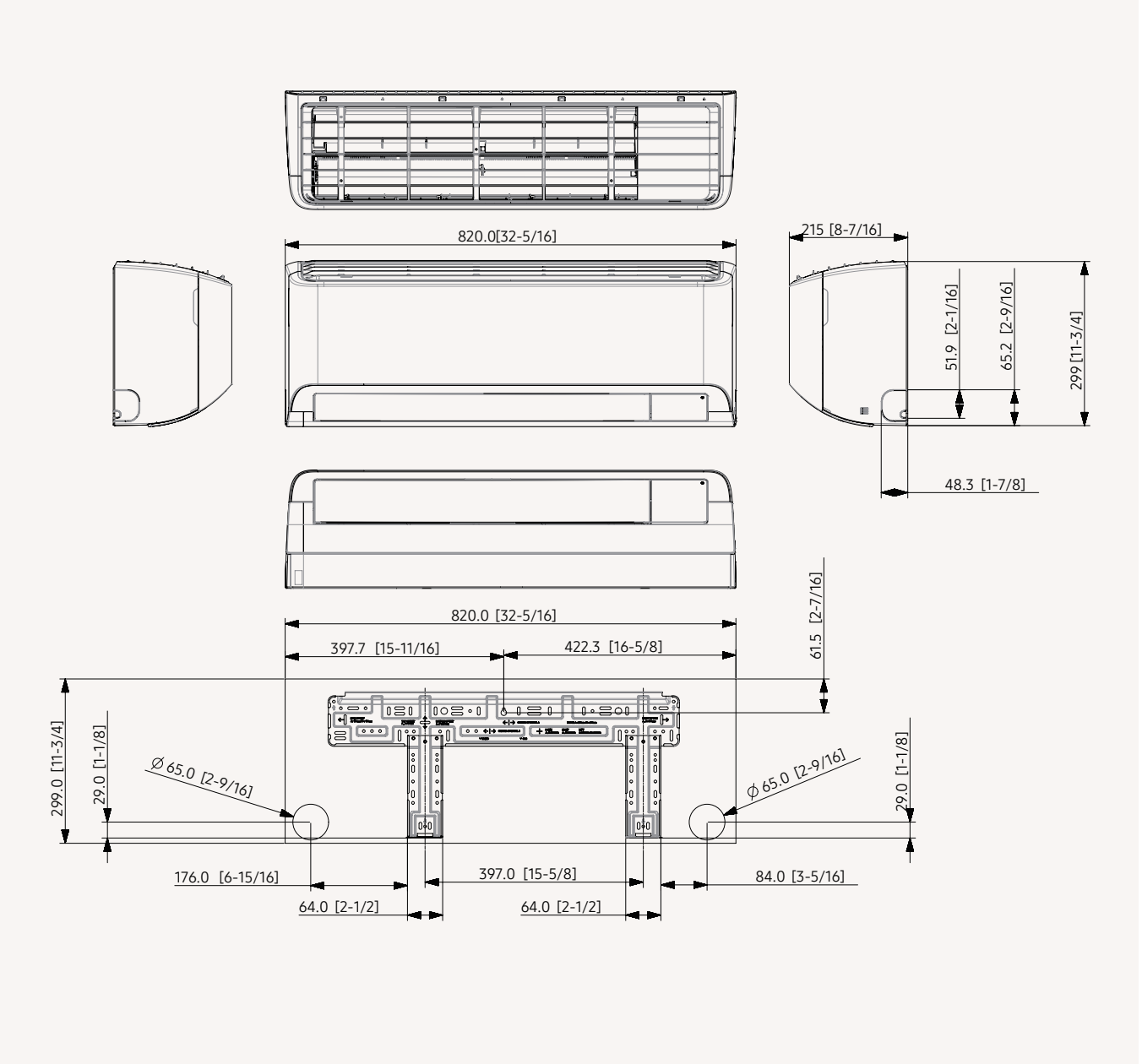

NO	Name	Description
1	Refrigerant gas pipe	ø12.70 (1/2) Flare
2	Refrigerant liquid pipe	ø6.35 (1/4) Flare
3	Drain pipe connection	ID 18 Hose

AM045TNVDKH/EU, AM056TNVDKH/EU, AM071TNVDKH/EU, AM082TNVDKH/EU

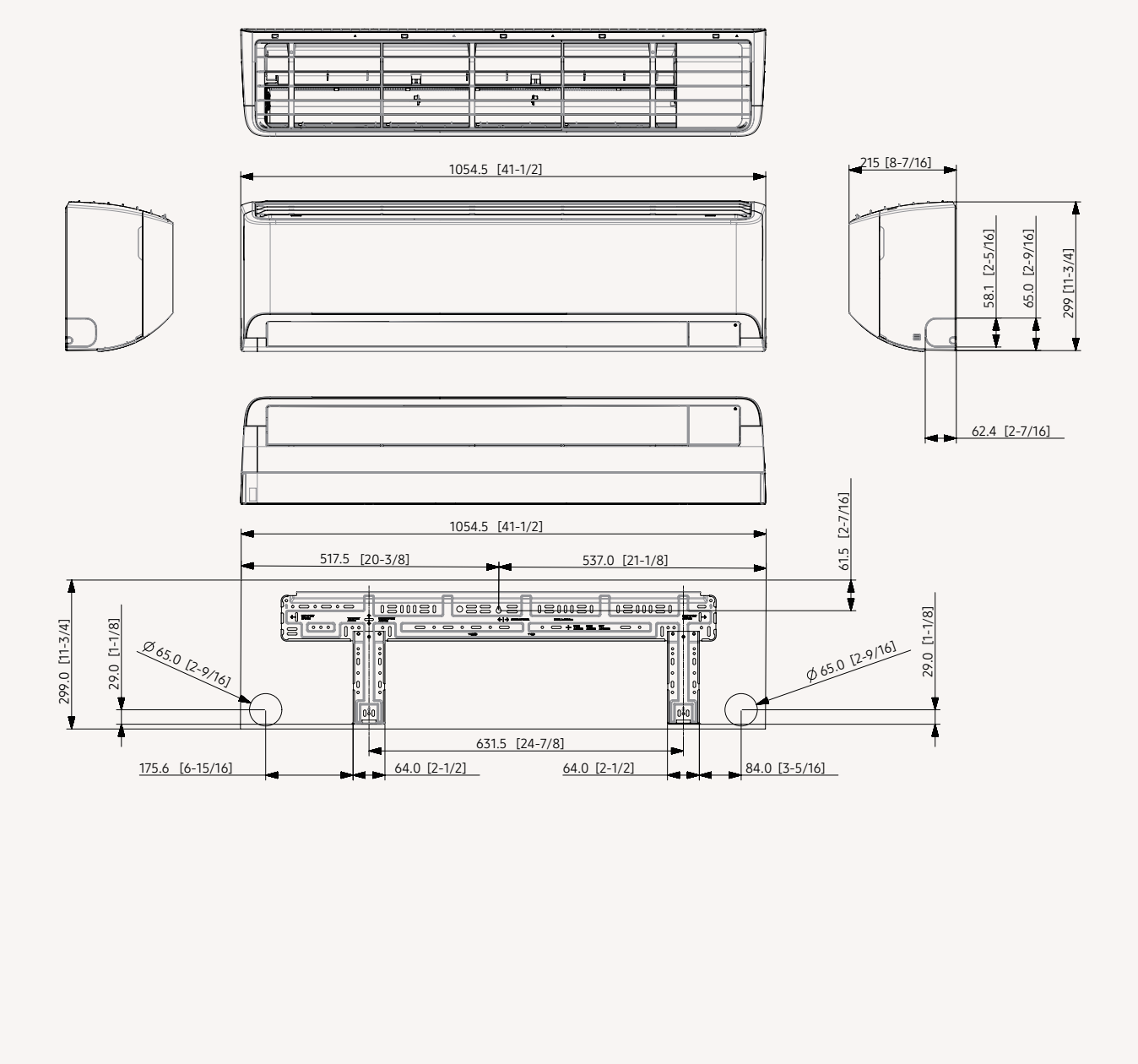

NO	Name	Description
1	Refrigerant gas pipe	ø12.70 (1/2) Flare
2	Refrigerant liquid pipe	ø6.35 (1/4) Flare
3	Drain pipe connection	ID 18 Hose

Specifications

WindFree™ Deluxe (EEV excluded)

- Three-step cooling: Fast Cooling mode, Dehumidification mode and WindFree™ Cooling mode.
- Wi-Fi Control with SmartThings and Bixby voice controls.
- Equipped with Easy Filter Plus.

				AM015TNADKH/EU	AM022TNADKH/EU	AM028TNADKH/EU
Power Supply			Φ, #, V, Hz	1Φ, 2, 220~240 V, 50/60 Hz	1Φ, 2, 220~240 V, 50/60 Hz	1Φ, 2, 220~240 V, 50/60 Hz
Performance	Capacity (Nominal)	Cooling	kW	1.5	2.2	2.8
		Heating	kW	1.7	2.5	3.2
Power	Capacity (Nominal)	Cooling	W	20	24	30
		Heating	W	20	24	30
	Current Input (Nominal)	Cooling	A	0.13	0.16	0.20
		Heating	A	0.13	0.16	0.20
	MCA		A	0.2	0.2	0.3
	MFA		A	15	15	15
Fan	Motor	Type	-	Crossflow Fan	Crossflow Fan	Crossflow Fan
		Output	W	27 x 1	27 x 1	27 x 1
	Airflow Rate	H/M/L (UL)	m^3/min	4.9/4.5/4.1	5.7/5.0/4.5	8.5/7.7/6.9
			l/s	81.7/75.0/68.3	95.0/83.3/75.0	141.7/128.3/115.0
Piping Connections	Liquid Pipe		ø, mm	6.35	6.35	6.35
			ø, inch	1/4	1/4	1/4
	Gas Pipe		ø, mm	12.70	12.70	12.70
			ø, inch	1/2	1/2	1/2
	Drain Pipe		ø, mm	ID 18 HOSE	ID 18 HOSE	ID 18 HOSE
Field Wiring	Power Source Wire		mm^2	1.5/2.5	1.5/2.5	1.5/2.5
	Transmission Cable		mm^2	0.75~1.50	0.75~1.50	0.75~1.50
	Remark		-	F1, F2	F1, F2	F1, F2
Refrigerant	Type		-	R410A (Fluorinated greenhouse gas, GWP = 2,088)		
	Control Method[1]		-	EEV NOT INCLUDED	EEV NOT INCLUDED	EEV NOT INCLUDED
Sound	Sound Pressure[2]	(H/M/L)	dB(A)	31/30/27/26 (WindFree™)	34/32/30/27 (WindFree™)	34/33/32/26 (WindFree™)
	Sound Power	Cooling	dB(A)	50	51	52
Dimensions	Net Weight		kg	8.5	8.5	9.0
	Net Dimensions (W × H × D)		mm	820 x 299 x 215	820 x 299 x 215	820 x 299 x 215
Air Filter			-	Easy Filter Plus	Long-life Filter	Long-life Filter

Accessories

Wireless Remote Controller	Touch Controller	Wired Remote Controller	Wi-Fi Kit	EEV Kit 1 Indoor	EEV Kit 2 Indoor	EEV Kit 3 Indoor
AR-EH03E	MWR-SH11N	MWR-WG00*N	MIM-H04EN	MEV-***SA	MXD-E24/32K***A	MXD-E24/32K***A

[1] EEV Kit is necessary to control the refrigerant flow in the WindFree™ Deluxe (EEV Excluded), please order EEV Kit separately.
[2] Sound pressure level is obtained in an anechoic room. Sound pressure level is a relative value, depending on the distance and acoustic environment. Sound pressure level may differ depending on operation conditions.

AM036TNADKH/EU	AM045TNADKH/EU	AM056TNADKH/EU	AM071TNADKH/EU	AM082TNADKH/EU
1Φ, 2, 220~240 V, 50/60 Hz	1Φ, 2, 220~240 V, 50/60 Hz	1Φ, 2, 220~240 V, 50/60 Hz	1Φ, 2, 220~240 V, 50/60 Hz	1Φ, 2, 220~240 V, 50/60 Hz
3.6	4.5	5.6	6.8	8.2
4.0	5.0	6.3	7.0	8.5
37	40	52	60	65
37	40	52	60	65
0.25	0.27	0.35	0.40	0.43
0.25	0.27	0.35	0.40	0.43
0.3	0.3	0.4	0.5	0.5
15	15	15	15	15
Crossflow Fan	Crossflow Fan	Crossflow Fan	Crossflow Fan	Crossflow Fan
27 x 1	27 x 1	27 x 1	27 x 1	27 x 1
10.3/9.1/8.3	12.5/11.4/10.5	15.7/13.8/12.0	16.8/15.0/13.2	17.5/15.6/13.8
171.7/151.7/138.3	208.3/190.0/175.0	261.7/230.0/200.0	280.0/250.0/220.0	291.7/260.0/230.0
6.35	6.35	6.35	9.52	9.52
1/4	1/4	1/4	3/8	3/8
12.70	12.70	12.70	15.88	15.88
1/2	1/2	1/2	5/8	5/8
ID 18 HOSE	ID 18 HOSE	ID 18 HOSE	ID 18 HOSE	ID 18 HOSE
1.5/2.5	1.5/2.5	1.5/2.5	1.5/2.5	1.5/2.5
0.75~1.50	0.75~1.50	0.75~1.50	0.75~1.50	0.75~1.50
F1, F2	F1, F2	F1, F2	F1, F2	F1, F2
R410A (Fluorinated greenhouse gas, GWP = 2,088)				
EEV NOT INCLUDED	EEV NOT INCLUDED	EEV NOT INCLUDED	EEV NOT INCLUDED	EEV NOT INCLUDED
40/36/34/26 (WindFree™)	37/34/33/29 (WindFree™)	40/37/34/29 (WindFree™)	43/40/37/29 (WindFree™)	46/45/43/30(WindFree™)
56	55	58	62	64
9.0	11.5	11.5	11.5	12.5
820 x 299 x 215	1055 x 299 x 215	1055 x 299 x 215	1055 x 299 x 215	1055 x 299 x 215
Long-life Filter	Long-life Filter	Long-life Filter	Long-life Filter	Long-life Filter

Dimensional drawings

WindFree™ Deluxe (EEV excluded)

AM015TNADKH/EU, AM022TNADKH/EU, AM028TNADKH/EU, AM036TNADKH/EU

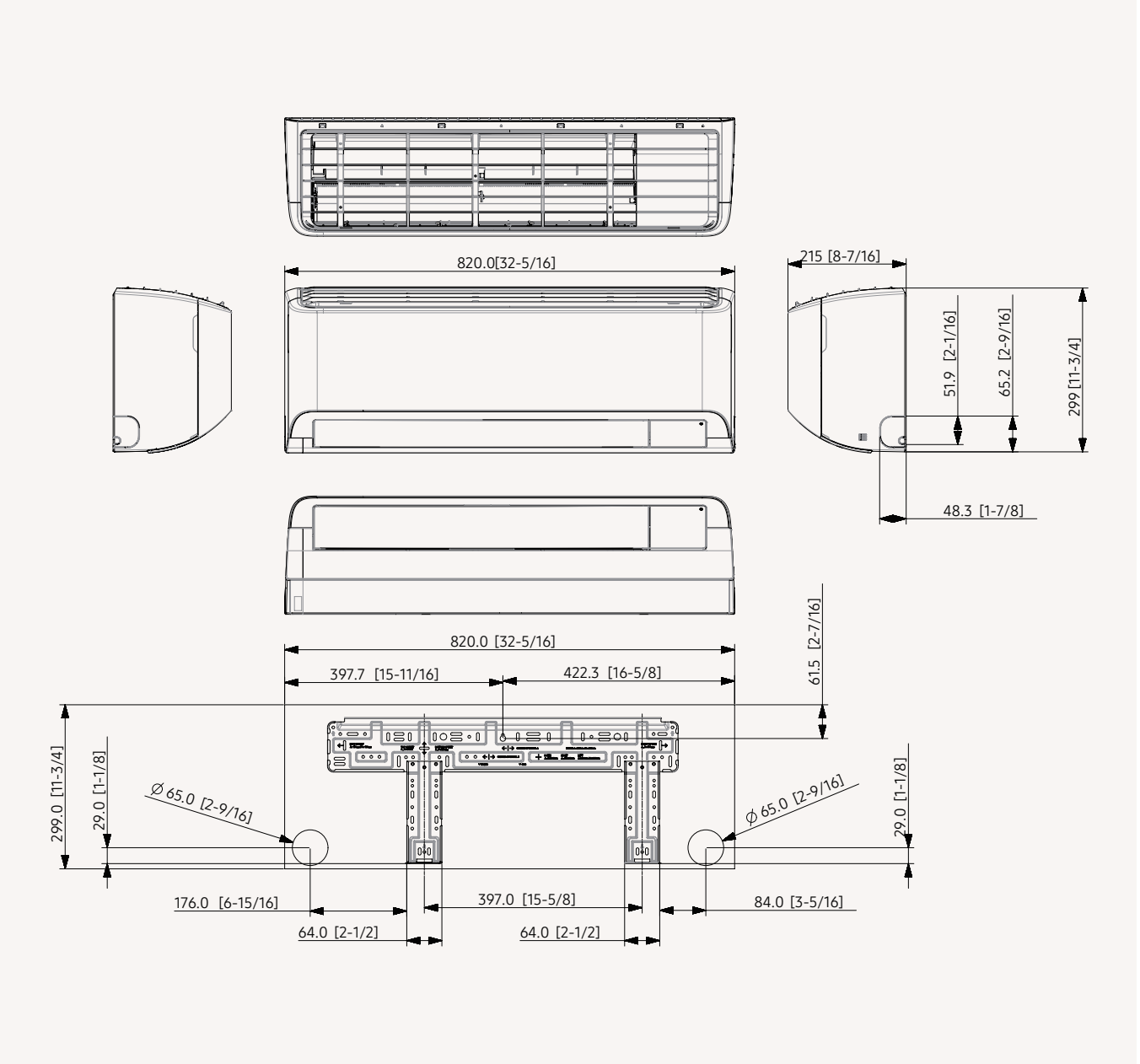

NO	Name	Description
1	Refrigerant gas pipe	ø12.70 (1/2) Flare
2	Refrigerant liquid pipe	ø6.35 (1/4) Flare
3	Drain pipe connection	ID 18 Hose

AM045TNADKH/EU, AM056TNADKH/EU, AM071TNADKH/EU, AM082TNADKH/EU

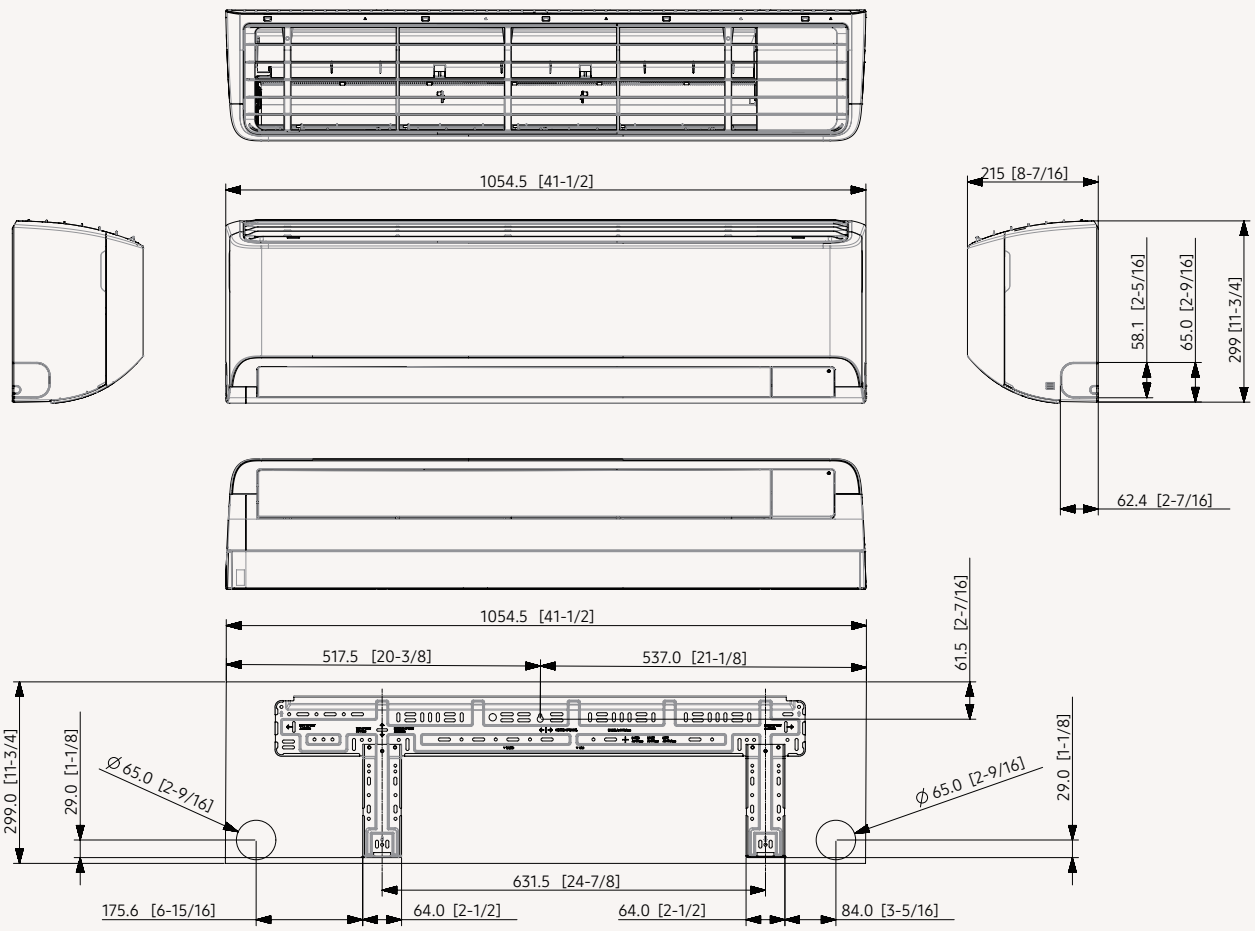

NO	Name	Description
1	Refrigerant gas pipe	ø12.70 (1/2) Flare
2	Refrigerant liquid pipe	ø6.35 (1/4) Flare
3	Drain pipe connection	ID 18 Hose

Specifications

Max Wall-Mounted

- Cross-flow fan direct driven by a single BLDC motor.
- Return air is filtered by means of an easily removable, washable pre filter.
- Motorised louvre provides an automatic change in airflow by directing the air up and down.
- Manual adjustable guide vane allows users to change the airflow from side to side (left to right).
- Can be controlled by Smartphone via Wi-Fi Kit (Optional).

Model				AM093MNQDEH/EU
Power Supply			Φ, #, V, Hz	1Φ, 2, 220~240 V, 50 Hz
Performance	Capacity	Cooling	kW	9.3
		Heating	kW	9.8
Power	Power Input	Cooling	W	66
		Heating	W	76
	Current Input	Cooling	A	0.47
		Heating	A	0.54
	Current	MCA	A	0.68
		MFA	A	15
Fan	Type		-	Crossflow Fan
	Number of Fans		ea	1
	Airflow Rate	H/M/L	m³/min	23/20/17
			l/s	383/333/283
Fan Motor	Type		-	BLDC Motor
	Output x n		W	58 x 1
Piping Connections	Liquid Pipe		ø, mm	9.52
			ø, inch	3/8
	Gas Pipe		ø, mm	15.88
			ø, inch	5/8
	Drain Pipe		ø, mm	ID 18 HOSE
Wiring Connections	Communication	Min.	mm²	0.75
		Remark	-	F1, F2
Refrigerant	Type		-	R410A (Fluorinated greenhouse gas, GWP=2,088)
	Electronic Expansion Valve		-	EEV INCLUDED
Sound	Sound Pressure[1]	H/M/L	dB(A)	49/46/42
	Sound Power	Cooling	dB(A)	66
Dimensions	Net Weight		kg	18.5
	Net Dimensions (W × H × D)		mm	1,280 x 345 x 253
Air Filter			-	Pre filter

Accessories

Touch Controller	Wired Remote Controller	Wi-Fi Kit	External Room Sensor
MWR-SH11N	MWR-WG00*N	MIM-H04EN	MRW-TA

[1] Sound pressure level is obtained in an anechoic room. Sound pressure level is a relative value, depending on the distance and acoustic environment. Sound pressure level may differ depending on operation conditions.

Dimensional drawings

Max Wall-Mounted

AM093MNQDEH**

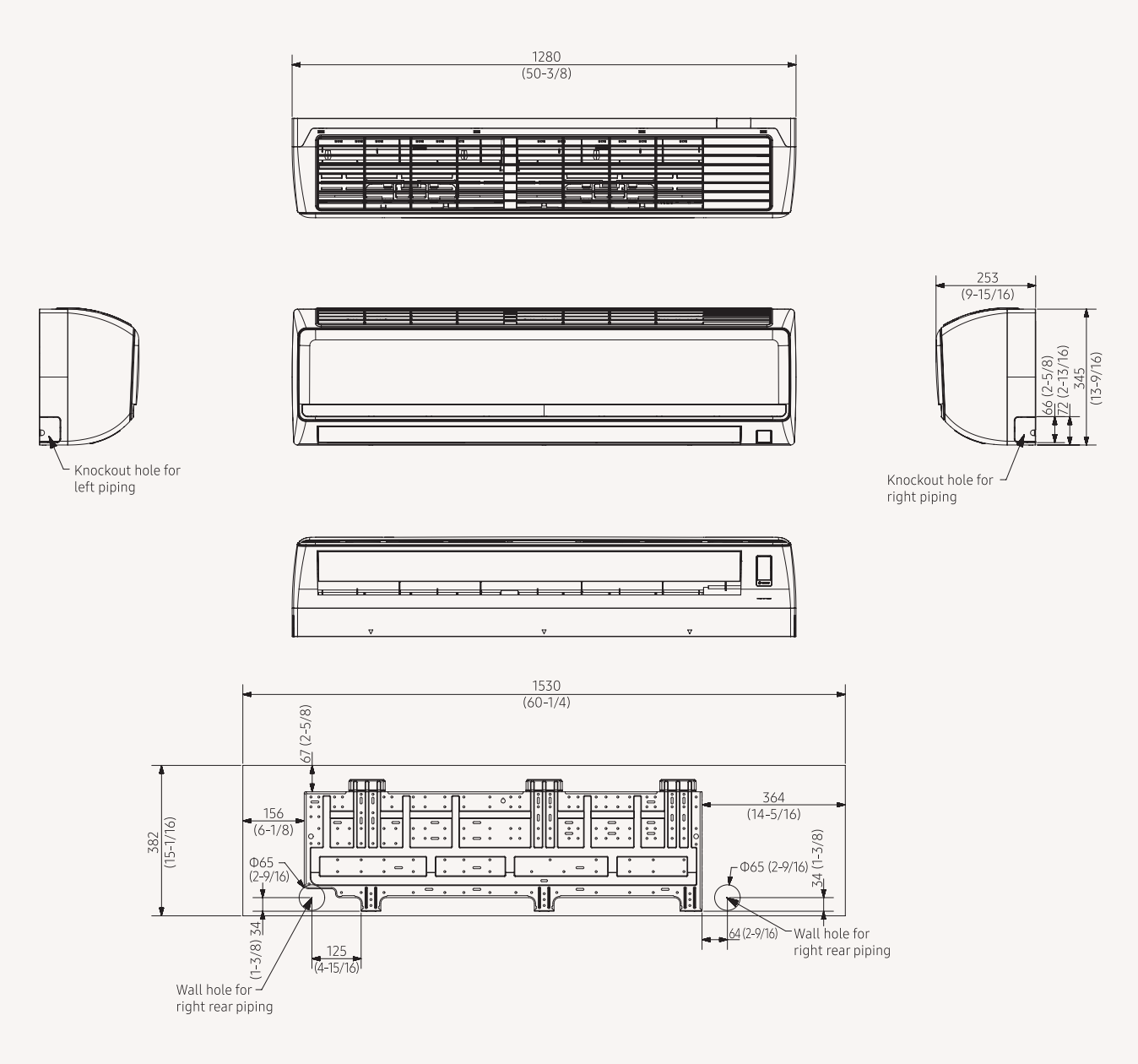

NO	Name	Description
1	Liquid pipe connection	ø9.52 (3/8)
2	Gas pipe connection	ø15.88 (5/8)
3	Drain pipe connection	ID 18 HOSE
4	Power supply/communication wiring conduits	-

Specifications

VRF

Hydro Unit

- Production of low temperature hot water and chilled water.
- Hot water production to a maximum temperature of 50 °C/80 °C (HT models).
- Two-way control: leaving water temperature and room temperature control.
- Connection to low temperature radiators and AHU water coils.
- Hot water production for domestic hot water use.
- Connectable to Heat Recovery DVM S systems (excluding 50 kW hydro unit).

Model (HE)				AM160FNBDEH/EU	AM320FNBDEH/EU	AM500FNBDEH/EU
Power Supply			Φ, #, V, Hz	1Φ, 2, 220~240 V, 50 Hz	1Φ, 2, 220~240 V, 50 Hz	1Φ, 2, 220~240 V, 50 Hz
Performance	Capacity (Nominal)	Cooling	kW	14.0	28,0	44.8
		Heating	kW	16.0	31.5	50.4
Power	Power Input (Nominal)	Cooling	W	10	10	10
		Heating	W	10	10	10
	Current Input (Nominal)	Cooling	A	0.05	0.05	0.05
		Heating	A	0.05	0.05	0.05
	MCA (Including External Contact)		A	2.2	2.2	2.2
	MFA		A	2.75	2.75	2.75
Heat Exchanger	Type		-	PHE	PHE	PHE
	Quantity		ea	1	1	1
	Pipe Size		ø, inch	PT1 (25A)	PT1 (25A)	PT1 1/4 (32A)
	Water Flow Rate		l/min	48	92	150
	Flow Switch		l/min	20	30	50
Piping Connections	Liquid Pipe		ø, mm	9.52	9.52	12.70
			ø, inch	3/8	3/8	1/2
	Gas Pipe		ø, mm	15.88	22.20	28.58
			ø, inch	5/8	7/8	1 1/8
Field Wiring	Power Source Wire (L<10 m, Single Installation)		mm²	2.5	2.5	2.5
	Transmission Cable		mm²	0.75~1.50	0.75~1.50	0.75~1.50
Refrigerant	Type		-	R410A (Fluorinated greenhouse gas, GWP=2,088)		
	Control Method		-	EEV	EEV	EEV
Sound	Sound Pressure[1]		dB(A)	27	28	31
	Sound Power		dB(A)	54	56	59
Dimensions	Net Weight		kg	29.0	33.0	40.0
	Net Dimensions (W × H × D)		mm	518 x 627 x 330	518 x 627 x 330	518 x 627 x 330
Operating Temperature Range	Ambient	Cooling	˚C	-5.0~48.0	-5.0~48.0	-5.0~48.0
		Heating	˚C	-20.0~35.0	-20.0~35.0	-20.0~35.0
		Hot Water (Main Cooling, HR)	˚C	-20.0~35.0 (43.0)	-20.0~35.0 (43.0)	-20.0~35.0 (43.0)
	Leaving Water	Cooling	˚C	5.0~30.0	5.0~30.0	5.0~30.0
		Heating	˚C	20.0~50.0	20.0~50.0	20.0~50.0

Accessories	
Wired Remote Controller	Wired Remote Controller
MWR-WW00N	MWR-WW10*N

[1] Sound pressure level is obtained in an anechoic room. Sound pressure level is a relative value, depending on the distance and acoustic environment. Sound pressure level may differ depending on operation conditions.

Model (HT)				AM160TNBFEB/EU	AM160TNBFGB/EU	AM250TNBFEB/EU	AM250TNBFGB/EU
Power Supply			Φ, #, V, Hz	1Φ, 2, 220~240 V, 50 Hz	3Φ, 4, 380~415 V, 50 Hz	1Φ, 2, 220~240 V, 50 Hz	3Φ, 4, 380~415 V, 50 Hz
Performance	Capacity (Nominal)	Cooling	kW	-	-	-	-
		Heating	kW	16	16	25	25
Power	Power Input (Nominal)	Cooling	W	-	-	-	-
		Heating	W	3.1	3.1	5.0	5.0
	Current Input (Nominal)	Cooling	A	-	-	-	-
		Heating	A	14.30	4.85	23.10	7.85
	MCA (Including External Contact)		A	18.0	16.1	30.0	16.1
	MFA		A	25	20	40	20
Heat Exchanger	Type		-	PHE	PHE	PHE	PHE
	Quantity		ea	2	2	2	2
	Pipe Size		ø, inch	PT1 (25A)	PT1 (25A)	PT1 (25A)	PT1 (25A)
	Water Flow Rate		l/min	23	23	36	36
	Flow Switch		l/min	12	12	12	12
Piping Connections	Liquid Pipe		ø, mm	9.52	9.52	9.52	9.52
			ø, inch	3/8	3/8	3/8	3/8
	Gas Pipe		ø, mm	15.88	15.88	15.88	15.88
			ø, inch	5/8	5/8	5/8	5/8
Field Wiring	Power Source Wire (L<10 m, Single Installation)		mm²	4	2.5	4	2.5
	Transmission Cable		mm²	0.75~1.50	0.75~1.50	0.75~1.50	0.75~1.50
Refrigerant	Type		-	R134A (Fluorinated greenhouse gas, GWP=1,430)			
	Control Method		-	EEV	EEV	EEV	EEV
	Factory Charging		kg / tCO_2e	2.15/3.07	2.15/3.07	2.15/3.07	2.15/3.07
Sound	Sound Pressure[1]		dB(A)	42	42	42	42
	Sound Power		dB(A)	60	60	61	61
Dimensions	Net Weight		kg	105.0	103.5	105.0	103.5
	Net Dimensions (W × H × D)		mm	518 x 1,210 x 330	518 x 1,210 x 330	518 x 1,210 x 330	518 x 1,210 x 330
Operating Temperature Range	Ambient	Cooling	˚C	-	-	-	-
		Heating	˚C	-20~43	-20~43	-20~43	-20~43
		Hot Water (Main Cooling, HR)	˚C	-20~43	-20~43	-20~43	-20~43
	Leaving Water	Heating	˚C	25~80	25~80	25~80	25~80

Dimensional drawings

Hydro Unit

VRF

AM***FNBDEH/EU

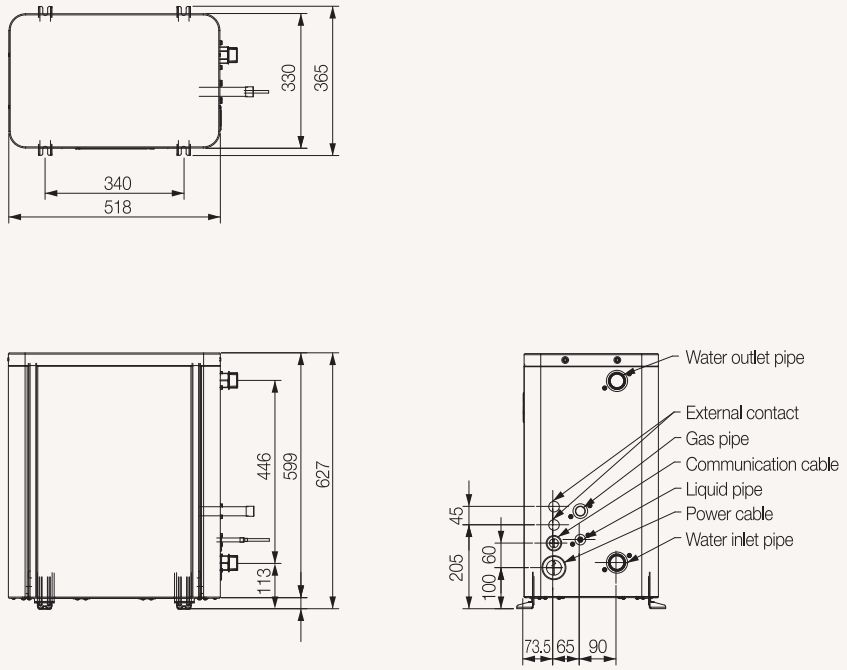

AM***TNBF*B/EU

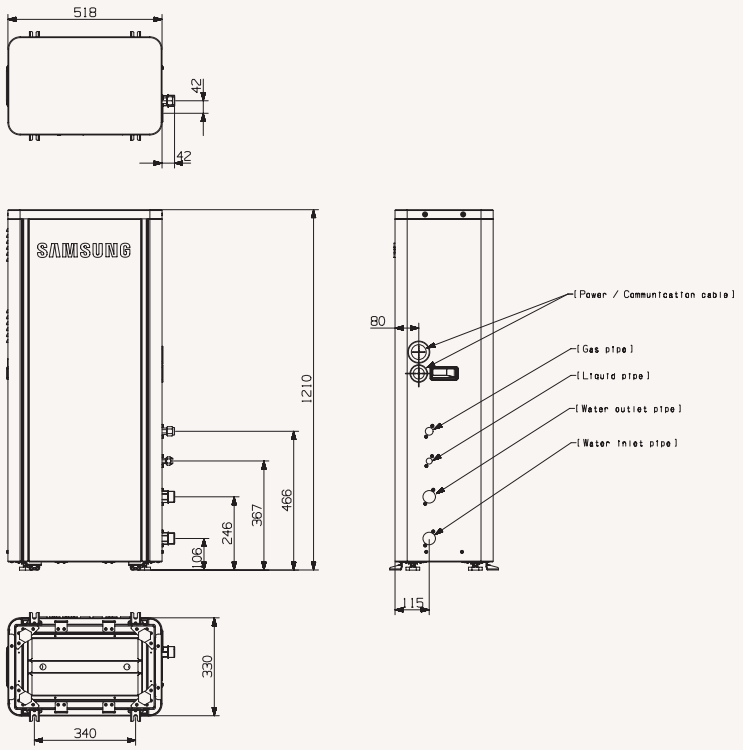

AM160/250TNBFEB/EU

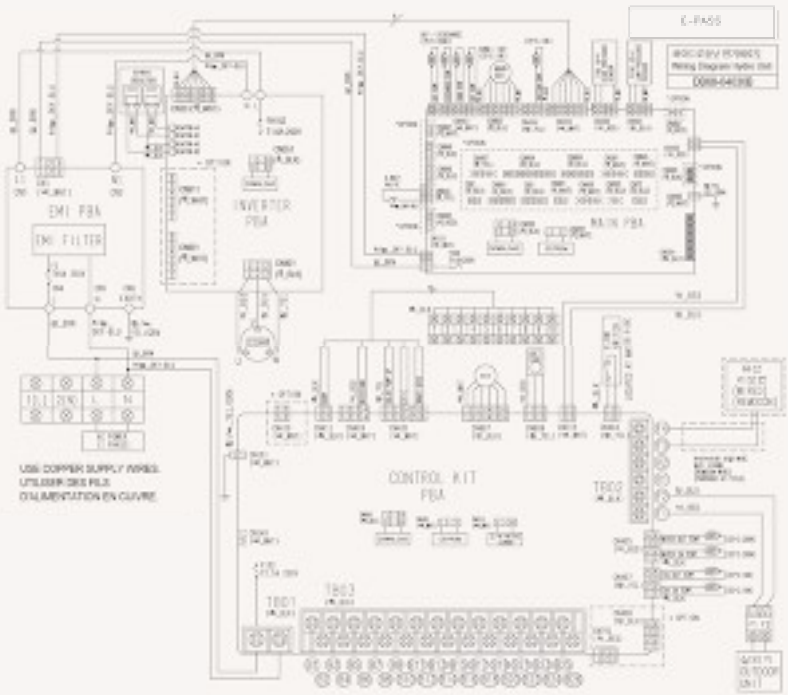

AM160/250TNBFGB/EU

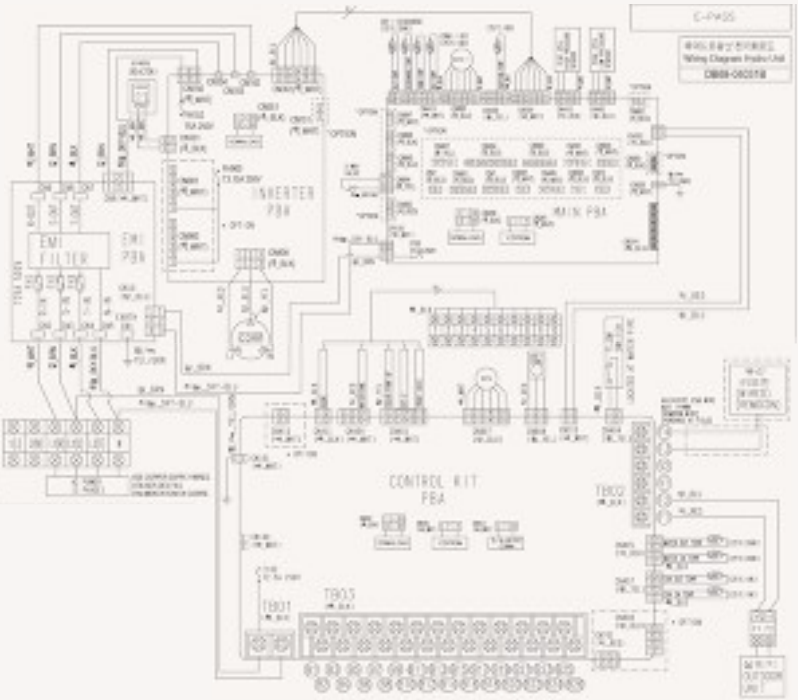

Specifications

Mode Control Unit (MCU)

- Enable simultaneous heating and cooling for DVM Heat Recovery model.

Model			MCU-R4NEK0N	MCU-S6NEK3N
Type			HR Changer	MCU
Power Supply		Φ, #, V, Hz	1Φ, 220~240 V, 50/60 Hz	1Φ, 220~240 V, 50/60 Hz
Mode		-	Heat Recovery	Heat Recovery
Max. number of indoor units		ea	12	18
Max. indoor units per port		ea	3	3
Number of ports		ea	4	6
Max. capacity of indoor units		kW	22.4	22.4
Max. capacity of indoor units per port		kW	5.6	5.6
	Y-Joint	kW	14.0	14.0
Refrigerant	Additional Refrigerant Charging	kg/unit	0.5	0.5
Piping Connections	Outdoor Unit - Liquid Pipe	ø, mm	9.52	9.52
		ø, inch	3/8	3/8
	Gas Pipe (Low Pressure)	ø, mm	19.05	19.05
		ø, inch	3/4	3/4
	Gas Pipe (High Pressure)	ø, mm	15.88	15.88
		ø, inch	5/8	5/8
	Indoor Unit - Liquid Pipe	ø, mm	6.35	6.35
		ø, inch	1/4	1/4
	Gas Pipe	ø, mm	12.70	12.70
		ø, inch	1/2	1/2
External Dimensions	Net Weight	kg	21.3	24.3
	Net Dimensions (W x H x D)	mm	728 x 199 x 469	728 x 199 x 469
Operating Temperature Range	Cooling	°C	-5~48	-5~48
	Heating	°C	-25~26	-25~26

Model				MCU-S1NEK1N	MCU-S2NEK2N	MCU-S4NEK3N	MCU-S6NEK2N	MCU-S8NEK1N	MCU-S12NEK1N
Power Supply			Φ, #, V, Hz	1Φ, 2, 220~240 V, 50 Hz, 1Φ, 2, 208~230 V, 60 Hz					
Power	Power Input (Nominal)	Cooling	W	19	25	40	55	80	110
		Heating	W	19	25	40	55	80	110
	Current Input (Nominal)	Cooling	A	0.20	0.20	0.20	0.30	0.40	0.60
		Heating	A	0.20	0.20	0.20	0.30	0.40	0.60
	MCA		A	2.0	2.0	2.0	2.0	2.0	2.0
	MFA (MOP)		A	15.0	15.0	15.0	15.0	15.0	15.0
Max. number of connectable indoor units			ea	8	16	32	32	64	64
Max. number of connectable indoor units per branch			ea	8	8	8	8	8	8
Number of branches			ea	1	2	4	6	8	12
Max. capacity of connectable indoor units			kW	16.0	32.0	61.6	61.6	85.0	85.0
Max. capacity of connectable indoor units per branch			kW	16.0	16.0	16.0	16.0	16.0	16.0
		Y-Joint	kW	-	32.0	32.0	32.0	32.0	32.0
Field Wiring	Power Source Wire		mm²	2.5	2.5	2.5	2.5	2.5	2.5
	Transmission Cable		mm²	0.75~1.50	0.75~1.50	0.75~1.50	0.75~1.50	0.75~1.50	0.75~1.50
Sound Pressure	Stable Cooling Operation		dB(A)	33	34	36	36	38	38
	Heating-to-Cooling Changeover		-	50	50	50	50	50	50
Additional Refrigerant Charging			kg/unit	0.5	0.5	0.5	0.5	1.0	1.0
Piping Connections	Outdoor Unit	Liquid Pipe	ø, mm	9.52	15.88	15.88	15.88	15.88	15.88
			ø, inch	3/8	5/8	5/8	5/8	5/8	5/8
		Gas Pipe	ø, mm	22.22	28.58	28.58	28.58	28.58	28.58
			ø, inch	7/8	11/8	11/8	11/8	11/8	11/8
		Discharge Gas	ø, mm	19.05	28.58	28.58	28.58	28.58	28.58
			ø, inch	3/8	11/8	11/8	11/8	11/8	11/8
	Indoor Unit	Liquid Pipe	ø, mm	9.52	9.52	9.52	9.52	9.52	9.52
			ø, inch	3/8	3/8	3/8	3/8	3/8	3/8
		Gas Pipe	ø, mm	15.88	15.88	15.88	15.88	15.88	15.88
			ø, inch	5/8	5/8	5/8	5/8	5/8	5/8
External Dimensions	Net Weight		kg	11.0	21.0	24.5	28.5	88.6	101.9
	Net Dimensions (W x H x D)		mm	338 x 199 x 409	728 x 199 x 469	728 x 199 x 469	728 x 199 x 469	980 x 298 x 469	980 x 298 x 469
Operation Limit	Cooling		°C (°F)	-15~48 (5~118.4)	-15~48 (5~118.4)	-15~48 (5~118.4)	-15~48 (5~118.4)	-15~48 (5~118.4)	-15~48 (5~118.4)
	Heating		°C (°F)	-25~24 (-13~75.2)	-25~24 (-13~75.2)	-25~24 (-13~75.2)	-25~24 (-13~75.2)	-25~24 (-13~75.2)	-25~24 (-13~75.2)

Dimensional drawings

Mode Control Unit (MCU)

MCU-R4NEK0N

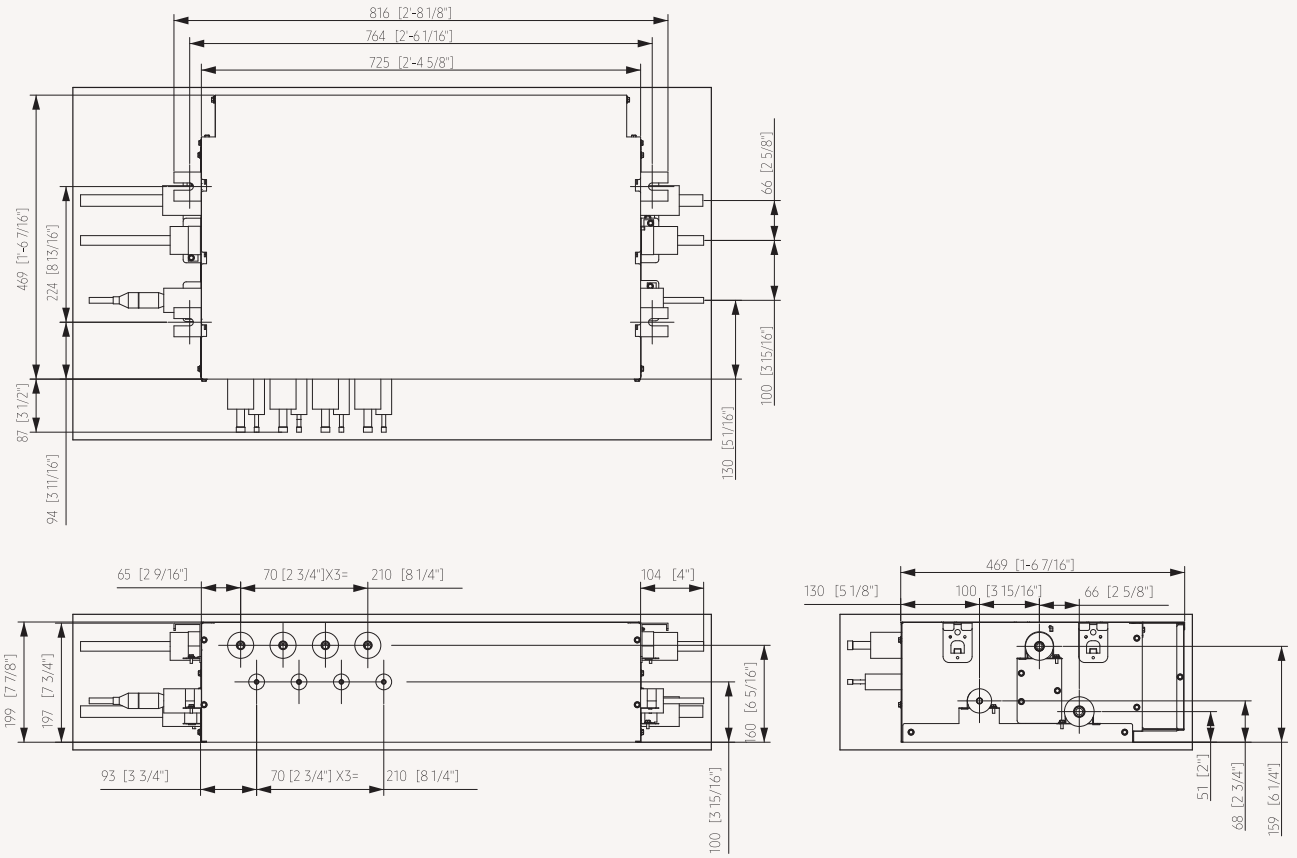

MCU-S6NEK3N

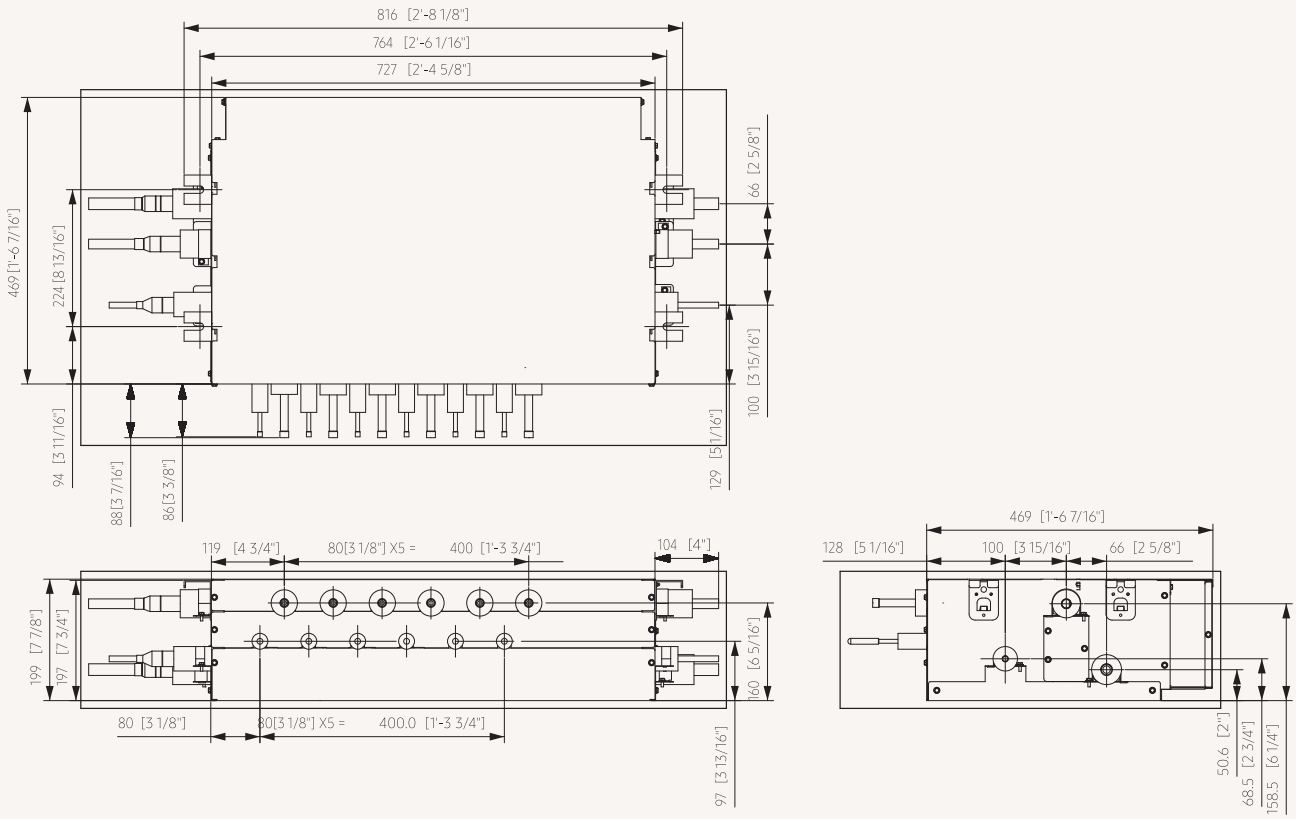
816 [2'-8 1/8"]
764 [2'-6 1/16"]
727 [2'-4 5/8"]
469 [1'-6 7/16"]
224 [8 13/16"]
94 [3 11/16"]
88 [3 7/16"]
86 [3 3/8"]
66 [2 5/8"]
100 [3 15/16"]
129 [5 1/16"]
119 [4 3/4"]
80[3 1/8"] X5 =
400 [1'-3 3/4"]
104 [4"]
199 [7 7/8"]
197 [7 3/4"]
160 [6 5/16"]
80 [3 1/8"]
80[3 1/8"] X5 =
400.0 [1'-3 3/4"]
97 [3 13/16"]
469 [1'-6 7/16"]
128 [5 1/16"]
100 [3 15/16"]
66 [2 5/8"]
50.6 [2"]
68.5 [2 3/4"]
158.5 [6 1/4"]

Dimensional drawings

Mode Control Unit (MCU)

MCU-S1NEK1N

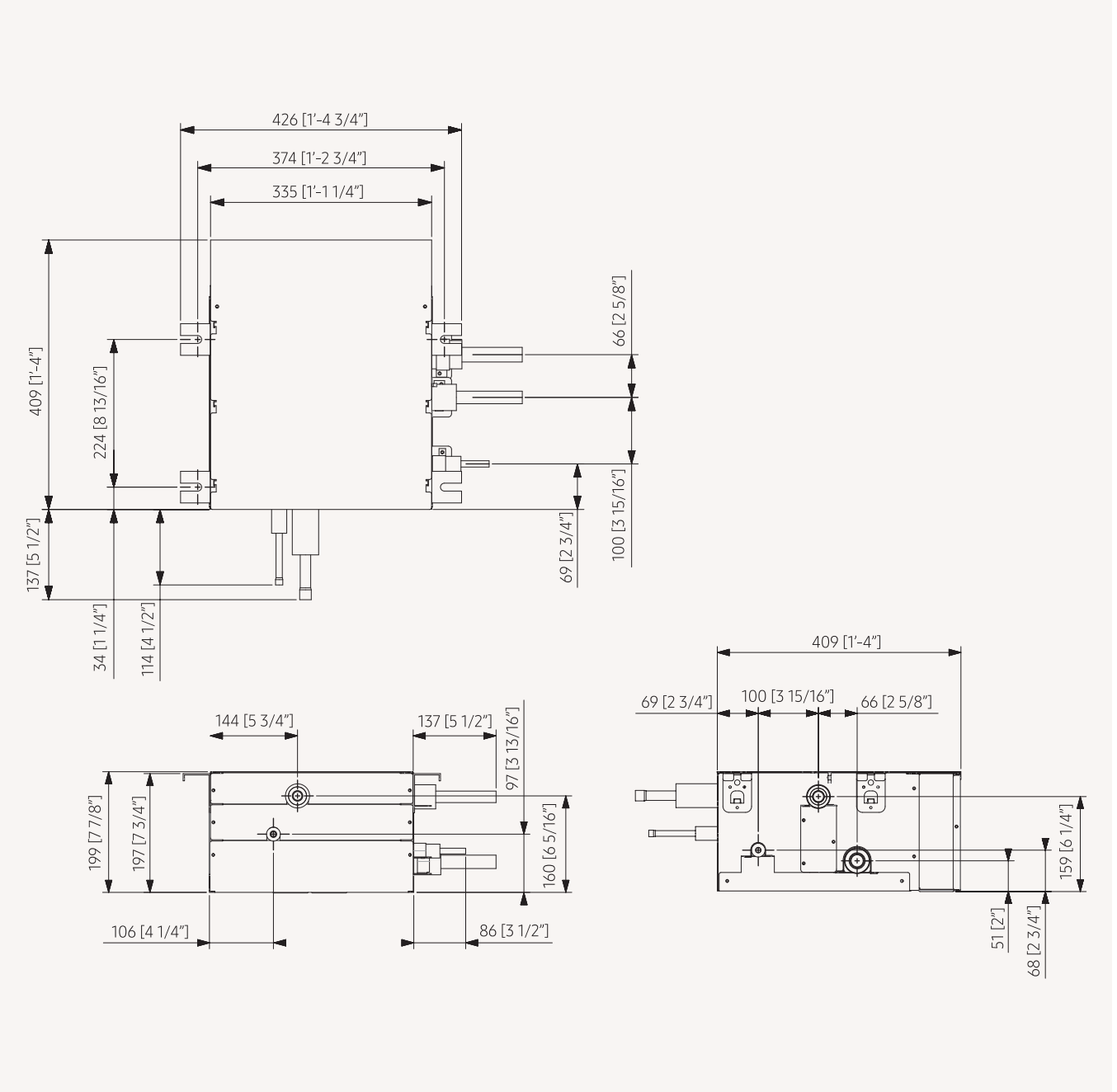

MCU-S2NEK2N

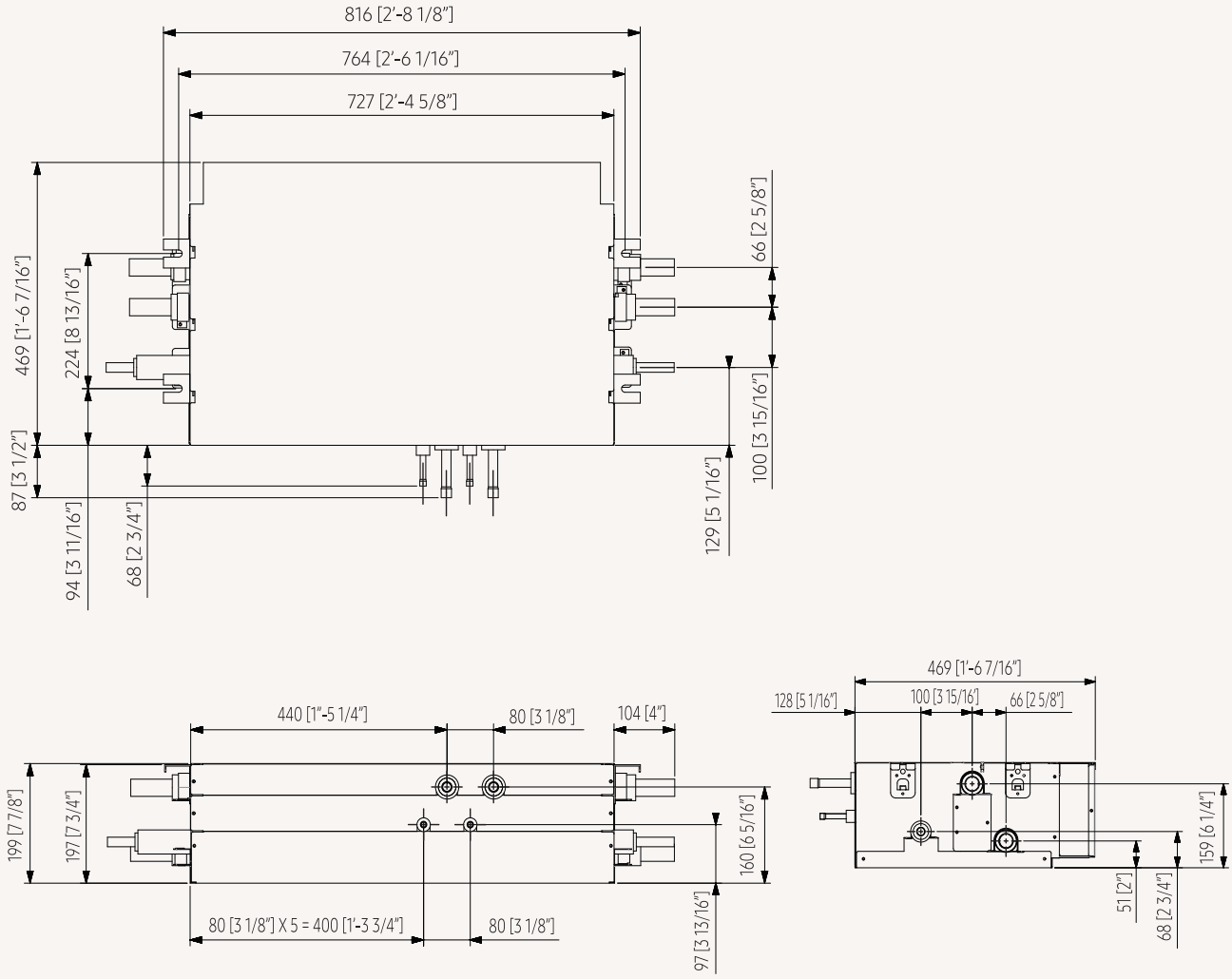
816 [2'-8 1/8"]
764 [2'-6 1/16"]
727 [2'-4 5/8"]
469 [1'-6 7/16"]
224 [8 13/16"]
87 [3 1/2"]
94 [3 11/16"]
68 [2 3/4"]
66 [2 5/8"]
100 [3 15/16"]
129 [5 1/16"]
440 [1"-5 1/4"]
80 [3 1/8"]
104 [4"]
199 [7 7/8"]
197 [7 3/4"]
160 [6 5/16"]
97 [3 13/16"]
80 [3 1/8"] X 5 = 400 [1'-3 3/4"]
80 [3 1/8"]
469 [1'-6 7/16"]
128 [5 1/16"]
100 [3 15/16"]
66 [2 5/8"]
159 [6 1/4"]
51 [2"]
68 [2 3/4"]

Dimensional drawings

Mode Control Unit (MCU)

MCU-S4NEK3N

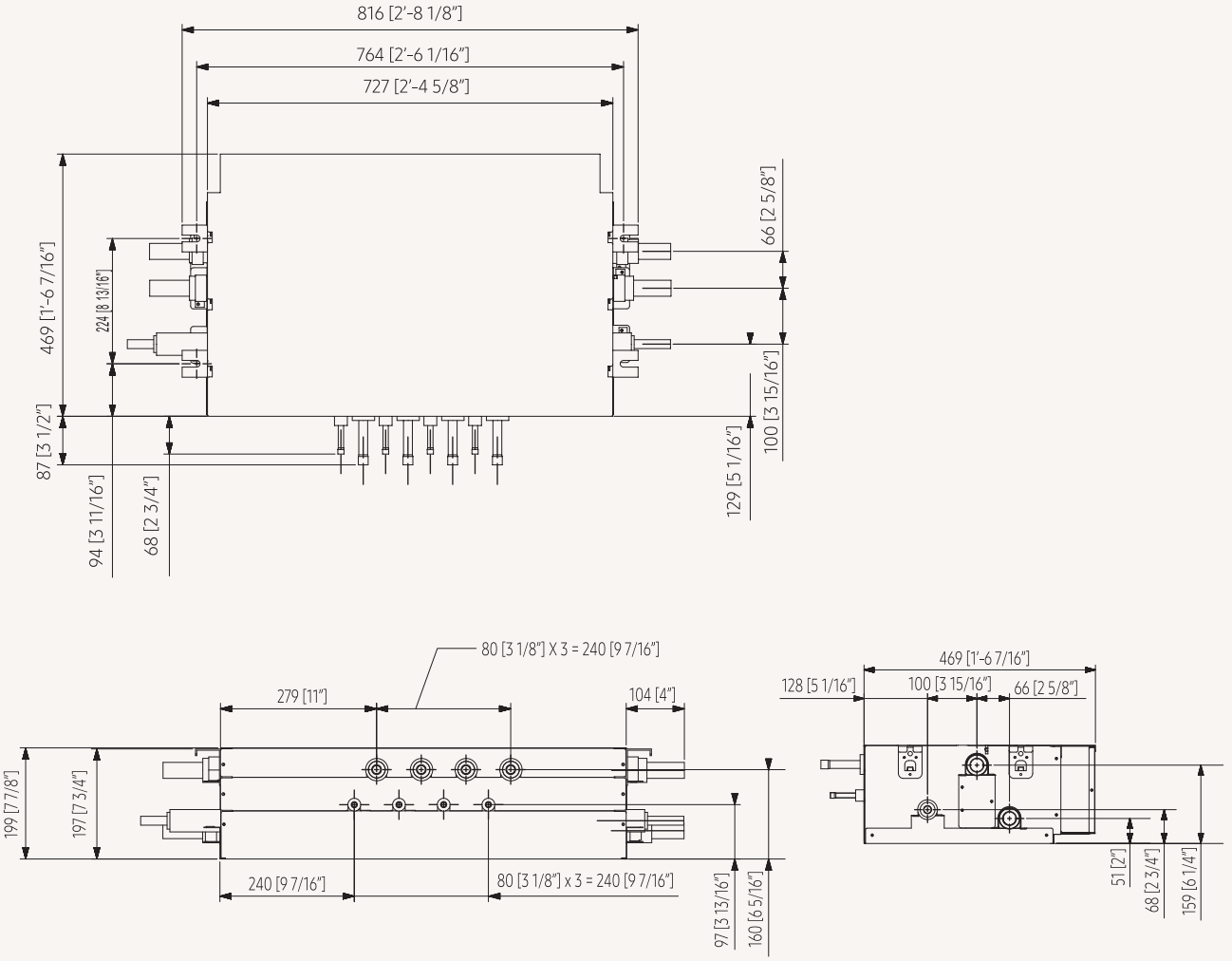

MCU-S6NEK2N

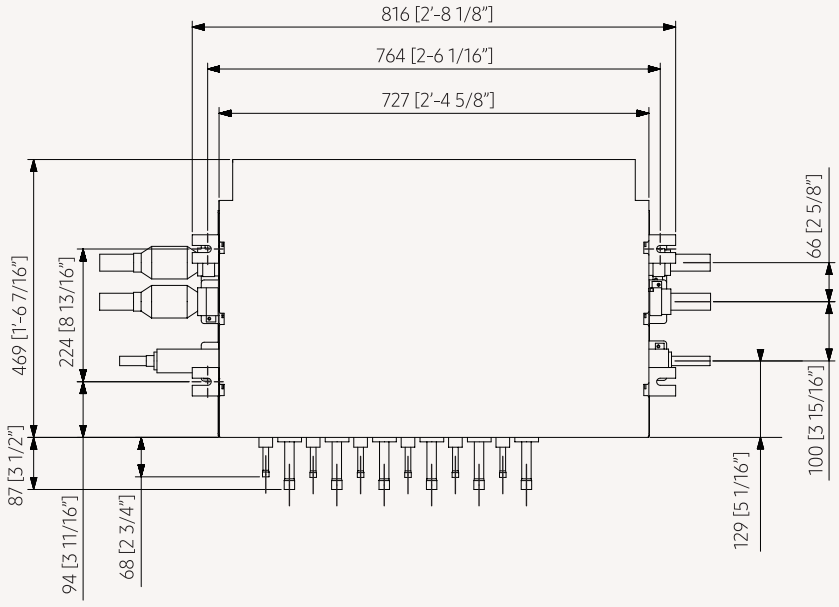
816 [2'-8 1/8"]
764 [2-6 1/16"]
727 [2'-4 5/8"]
469 [1'-6 7/16"]
224 [8 13/16"]
87 [3 1/2"]
94 [3 11/16"]
68 [2 3/4"]
66 [2 5/8"]
100 [3 15/16"]
129 [5 1/16"]

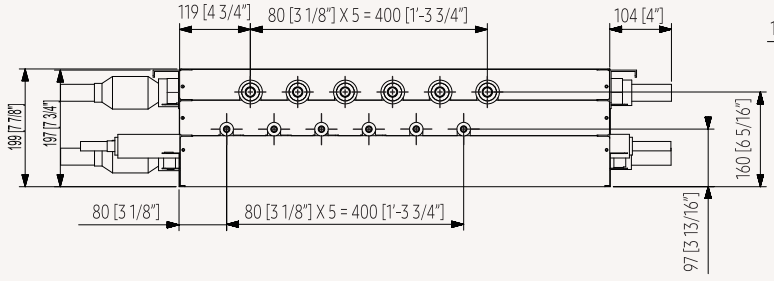
119 [4 3/4"]
80 [3 1/8"] X 5 = 400 [1'-3 3/4"]
104 [4"]
199 [7 7/8"]
197 [7 3/4"]
160 [6 5/16"]
80 [3 1/8"]
80 [3 1/8"] X 5 = 400 [1'-3 3/4"]
97 [3 13/16"]

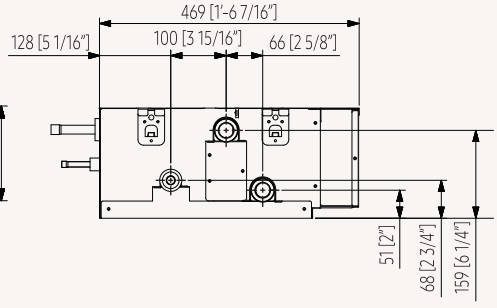
469 [1'-6 7/16"]
128 [5 1/16"]
100 [3 15/16"]
66 [2 5/8"]
51 [2"]
68 [2 3/4"]
159 [6 1/4"]

Dimensional drawings

Mode Control Unit (MCU)

MCU-S8NEK1N

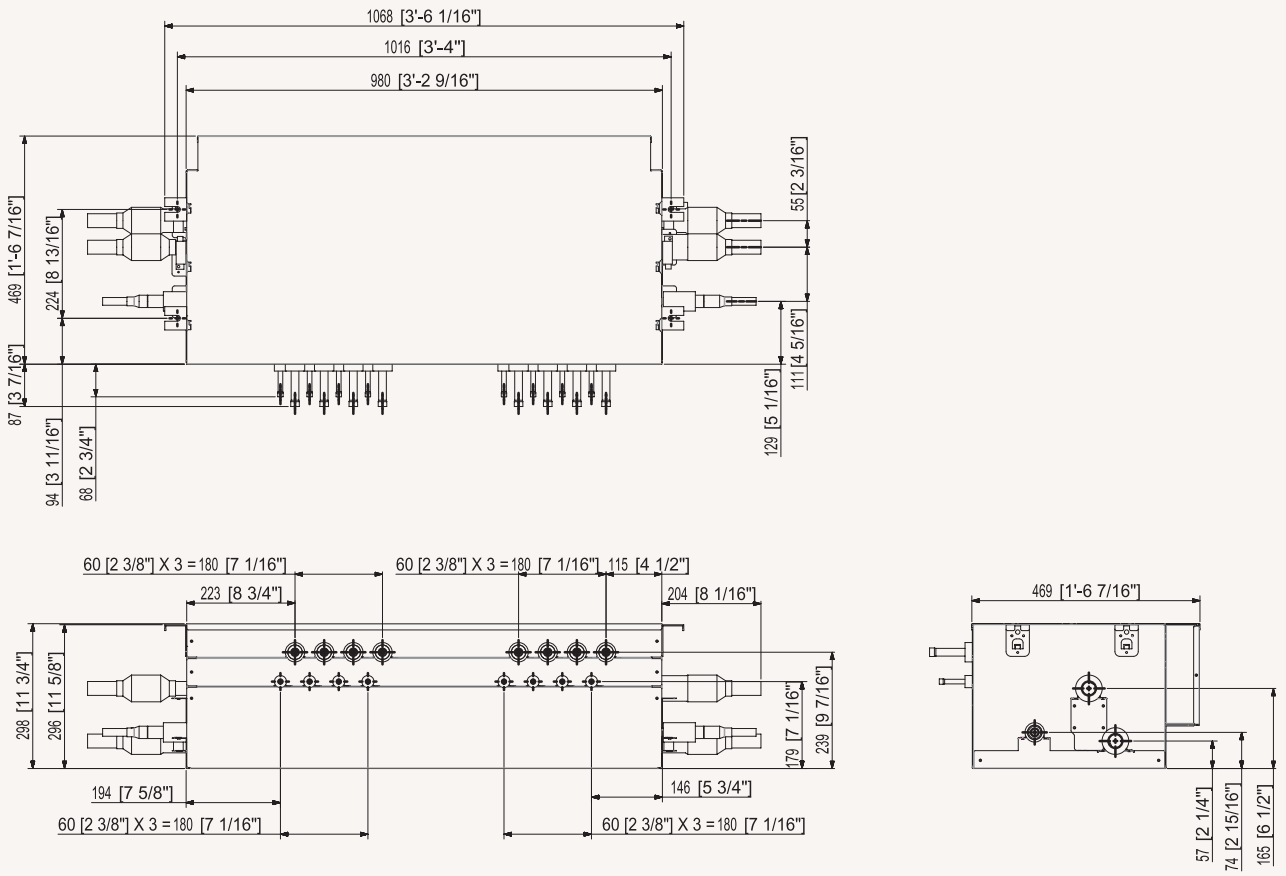

MCU-S12NEK1N

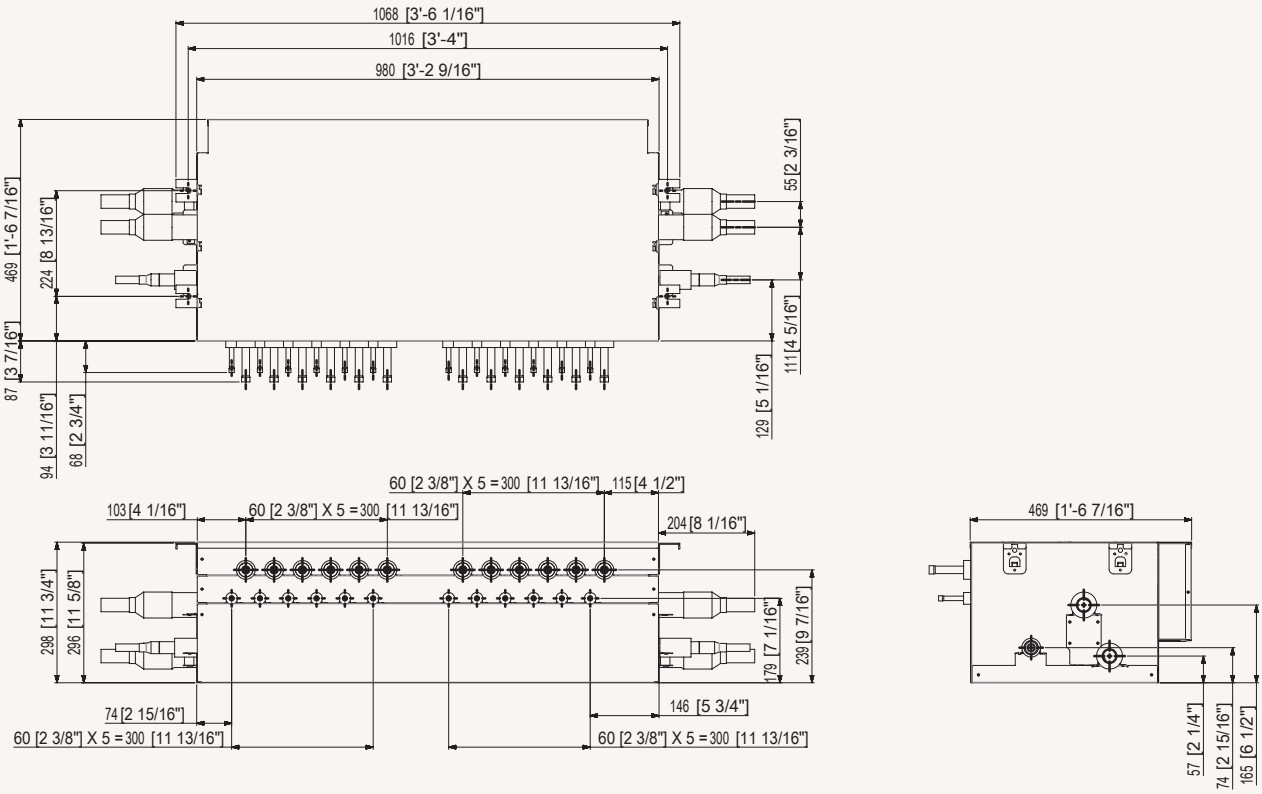

Specifications

AHU Kit for Outdoor Unit

- Provide the benefits of the AHU and DVM systems at the same time.
- Centralised air conditioning system.
- The AHU kit can provide cooling or heating in one package.

Model				AHU Kit		
				MXD-K025AN	MXD-K050AN	MXD-K075AN
Connectable Outdoor				HP/HR	HP/HR	HP/HR
Power Supply			Φ, #, V, Hz	1Φ, 2, 220~240 V, 50/60 Hz	1Φ, 2, 220~240 V, 50/60 Hz	1Φ, 2, 220~240 V, 50/60 Hz
Design Recommendation	AHU Capacity Allowance	Max.	kW	8.8	17.5	24.9
			MBH	30	60	85
		Min.	kW	6.3	12.6	18.9
			MBH	21.6	43.2	64.8
	AHU Internal Heat Exchanger Volume Allowance	Max.	cm^3	2,000	4,000	6,000
		Min.	cm^3	1,200	2,400	4,100
Piping Connections (EEV Kit)	High pressure pipe from outdoor unit		ø, mm	9.52	9.52	9.52
			ø, inch	3/8	3/8	3/8
	High pressure pipe to AHU		ø, mm	9.52	9.52	9.52
			ø, inch	3/8	3/8	3/8
Sensor	EVA. IN		Type/Φ	103HW/6Φ	103HW/6Φ	103HW/6Φ
			m/mm^2	10 m/2*0.75 mm^2	10 m/2*0.75 mm^2	10 m/2*0.75 mm^2
	EVA. OUT		Type/Φ	103HW/7Φ	103HW/7Φ	103HW/7Φ
			m/mm^2	10 m/2*0.75 mm^2	10 m/2*0.75 mm^2	10 m/2*0.75 mm^2
	Room		Type/Φ	103HW/Moulding	103HW/Moulding	103HW/Moulding
			m/mm^2	10 m/2*0.75 mm^2	10 m/2*0.75 mm^2	10 m/2*0.75 mm^2
	Discharge		Type/Φ	103HW/7Φ	103HW/7Φ	103HW/7Φ
			m/mm^2	10 m/2*0.75 mm^2	10 m/2*0.75 mm^2	10 m/2*0.75 mm^2
Refrigerant	Type		-	R410A (Fluorinated greenhouse gas, GWP=2,088)		
EEV Kit	Type		-	INCLUDED	INCLUDED	INCLUDED
	EEV Wire Length		m	2	2	7
			ft	6.6	6.6	23.0
External Dimensions	EEV Kit	(W x H x D)	mm	415 x 102 x 170	415 x 102 x 170	415 x 102 x 170
	Control Box	(W x H x D)	mm	380 x 130 x 280	380 x 130 x 280	380 x 130 x 280

AHU Kit MXD-K100AN	Control Kit MCM-D201N	EEV Kit (Optional) MXD-A64K100E
HP/HR	HP	HP
1Φ, 2, 220~240 V, 50/60 Hz	1Φ, 2, 220~240 V, 50/60 Hz	-
35.0	35.0/70.0/105.0/140.0	35.0
120	119/239/358/478	119
25.2	25.2/50.4/75.6/100.8	25.2
86.4	86.4/172.8/259.2/345.6	86.4
8,000	8,000/16,000/24,000/32,000	8,000
6,100	6,100/12,200/18,300/24,400	6,100
9.52	-	12.70
3/8	-	1/2
9.52	-	12.70
3/8	-	1/2
103HW/6Φ	103HW/6Φ	-
10 m/2*0.75 mm^2	7 m/2*0.75 mm^2	-
103HW/7Φ	103HW/7Φ	-
10 m/2*0.75 mm^2	7 m/2*0.75 mm^2	-
103HW/Moulding	PT1000Ω/4~20 mA Field Supply	-
10 m/2*0.75 mm^2	-	-
103HW/7Φ	PT1000Ω/4~20 mA Field Supply	-
10 m/2*0.75 mm^2	-	-
R410A (Fluorinated greenhouse gas, GWP=2,088)		
INCLUDED	NOT INCLUDED	-
7	-	7
23.0	-	23.0
415 x 102 x 170	-	Accessory for MCM-D201N, ordered separately (1 per 10HP)
380 x 130 x 280	385 x 53 x 275	-

VRF Chiller

Line-up outdoor

Model Type	Image	42 kW	56 kW	65 kW
Standard model (pump excluded)		AG042KSVANH/EU	AG056KSVANH/EU	AG070KSVANH/EU

Combining modules allows each product to work at high capacity. You can combine up to 16 modules.

Combination guide - outdoor

Modulation guide

Total Capacity (kW)	Model			Suggested ø water type controller piping
	AG042	AG056	AG070	
42	1			40
56		1		40
65			1	50
84	2			50
112		2		65
126	3			65
130			2	80
168		3		80
168 (high efficiency)	4			80
195			3	80
210	5			80
224		4		100
252	6			100
260			4	100
280		5		100
294	7			100
325			5	100
336		6		100
336 (high efficiency)	8			100
378	9			100
390			6	100
392		7		100
420	10			100
448		8		125

Total Capacity (kW)	Model			Suggested ø water type controller piping
	AG042	AG056	AG070	
455			7	125
462	11			125
504		9		125
504 (high efficiency)	12			125
520			8	125
546	13			125
560		10		125
585			9	125
588	14			125
616		11		125
630	15			125
650			10	125
672		12		125
672 (high efficiency)	16			125
715			11	150
728		13		125
780			12	150
784		14		150
840		15		150
845			13	150
896		16		150
910			14	150
975			15	150
1,040			16	150

Line-up indoor

Model Type	Image	1.9 kW	2.6 kW	3.0 kW	4.2 kW	6.0 kW	7.2 kW	7.8 kW	9.0 kW	10.0 kW
WindFree™ 1-Way Cassette FCU			•	•	•					
WindFree™ 4-Way Cassette FCU						•	•		•	•
360 Cassette FCU						•	•		•	•
Concealed FCU		•		•	•		•	•		
Cased FCU		•		•	•		•	•		

VRF Chiller

Selection guide

	Cassette		
Feature	**WindFree™ 1-Way Cassette FCU**	**WindFree™ 4-Way Cassette FCU**	**360 Cassette FCU**
Cooling capacity range (nominal)	2.6–4.15 kW	6.0–10.0 kW	6.0–10.0 kW
Heating capacity range (nominal)	2.9–5.0 kW	7.3–10.7 kW	7.3–10.7 kW
Fan motor type	BLDC	BLDC	BLDC
Drain Pump	Built-in	Built-in	Built-in
Filter	Microfibrous filter	Microfibrous filter	Microfibrous filter
3-Way Valve	Optional	Optional	Optional
2-pipe	●	●	●
4-pipe (optional)			
Installation	Horizontal	Horizontal	Horizontal

Concealed and Cased

Feature	Concealed FCU[1]	Cased FCU[1]
Cooling capacity range (nominal)	1.9–7.8 kW	1.9–7.8 kW
Heating capacity range (nominal)	2.1–8.4 kW	2.1–8.4 kW
Fan motor type	3-step AC	3-step AC
Drain Pump	Optional	Optional
Filter	Polypropylene washable	Polypropylene washable
3-Way Valve	Built-in	Built-in
2-pipe	●	●
4-pipe (optional)	●	●
Installation	Horizontal/vertical	Horizontal/vertical

[1] Concealed FCU and Cased FCU are third party products

Nomenclature

Indoor units

AG	072	A	N	4	P	K	H
1	2	3	4	5	6	7	8

1	Classification	AG	Chiller/Fan Coil Unit (FCU)
2	Capacity	x1/10 kW (3 digits)	
3	Version	K	2016
		M	2017
		N	2018
		T	2020
		A	2021
4	Product Type	N	Indoor Unit
5	Product Notation	1	WindFree™ 1-Way Cassette
		4	WindFree™ 4-Way Cassette, 360 Cassette
6	Feature	D	Deluxe
		P	Premium
7	Voltage Rating	K	1Φ, 220~240 V, 50/60 Hz
8	Mode	H	Heat Pump

Indoor units (third party)

ACL	65	D	F
1	2	3	4

1	Classification	ACL	Chiller/Fan Coil Unit (FCU)
2	Capacity	x1/10 kW (3 digits)	
3	Product Notation	D	2-Pipe FCU
		Q	4-Pipe FCU
		A	Accessory
4	Product Type	F	Concealed
		G	Cased

Outdoor units

AG	070	K	S	V	A	N	H
1	2	3	4	5	6	7	8

1	Classification	AG	Chiller (HVM Chiller)
2	Capacity	kW (3 digits)	
3	Version	K	2016
		M	2017
		N	2018
4	Product Type	S	SET HVM Chiller
5	Product Notation	V	Inverter
6	Feature	A	Non-pump
7	Voltage Rating	N	3Φ, 380~415 V, 50/60 Hz
8	Mode	H	Heat Pump

Specifications

HVM Chiller

- Air-cooled HVM Chiller Heat Pump.
- Option of connecting up to 16 modules for a total capacity of more than 1 MW.
- Capacity modulation between 15% and 100%.
- Each unit houses 2 Inverter Scroll compressors, all equipped with Flash Injection technology.

Model				AG042KSVANH/EU	AG056KSVANH/EU	AG070KSVANH/EU
Power Supply			Φ, #, V, Hz	3Φ, 4, 380~415 V, 50/60 Hz	3Φ, 4, 380~415 V, 50/60 Hz	3Φ, 4, 380~415 V, 50/60 Hz
Performance	Capacity (Nominal)	Cooling	kW	42	56	65
		Heating	kW	42.0	56.0	69.5
Power	Power Input (Nominal)	Cooling	kW	12.35	18.67	26.00
		Heating	kW	11.83	17.50	24.39
	Current Input (Nominal)	Cooling	A	19.6	29.6	41.2
		Heating	A	18.8	27.8	38.7
	Current	MCA	A	32	46	58
		MFA	A	40	60	75
Efficiency	EER Nominal Cooling (pump input is not included)		W/W	3.4	3.0	2.5
	COP Nominal Heating (pump input is not included)		W/W	3.55	3.20	2.85
	ESEER (Pump input is not included)		W/W	5.7	5.4	5.0
Fan	Type		-	Axial Fan	Axial Fan	Axial Fan
	Number of Fans		-	2	2	2
	Airflow Rate		m^3/min	364 (182 x 2)	364 (182 x 2)	392 (196 x 2)
			l/s	6,067	6,067	6,535
	External Static Pressure	Max.	mmAq	8.00	8.00	8.00
			Pa	78.5	78.5	78.5
Fan Motor	Type		-	BLDC Motor	BLDC Motor	BLDC Motor
	Output x n		W	630 x 2	630 x 2	630 x 2
Water Side Heat Exchanger	Type		-	Brazing Plate	Brazing Plate	Brazing Plate
	Water Flow Rate (Cooling/Heating)		l/min	120/120	160/160	186/200
	Pressure Drop (Set. Nominal)		kPa	60	100	120
	Max. Operating Pressure		MPa	1	1	1
	Connection Type		-	FLANGE	FLANGE	FLANGE
	Pipe Connection (Inlet/Outlet)		ø, mm	40	40	50
			ø, inch	1 1/2	1 1/2	2
	Quantity		-	2	2	2
Wiring Connections	Communication	Min.	mm^2	0.75	0.75	0.75
		Remark		F1, F2	F1, F2	F1, F2
Refrigerant	Type		-	R410A(Fluorinated greenhouse gas, GWP=2,088)		
	Factory Charging		kg/tCO_2e	18/37.58	18/37.58	18/37.58
Sound 2	Sound Pressure	Cooling	dB(A)	60	62	63
		Heating	dB(A)	57	59	64
	Sound Power		dB(A)	80	83	85
External Dimensions	Net Weight		kg	446.0	446.0	465.0
	Net Dimensions (W x H x D)		mm	1,795 x 1,695 x 765	1,795 x 1,695 x 765	1,795 x 1,695 x 765
Operating Water Temperature Range	Cooling		°C	5.0~25.0	5.0~25.0	5.0~25.0
	Cooling (if using brine)		°C	-10.0~25.0	-10.0~25.0	-10.0~25.0
	Heating		°C	25.0~55.0	25.0~55.0	25.0~55.0
Operating Water Flow Range	Water Flow Rate		l/min	60~240	80~320	93~400
	Minimum Water Storage in the System		L	294	392	490
Operating Ambient Temperature Range	Cooling		°C	-15.0~48.0	-15.0~48.0	-15.0~48.0
	Heating		°C	-25.0~43.0	-25.0~43.0	-25.0~43.0

Accessories

Module Controller	DMS2.5	BACnet Gateway	Touch Centralised Controller	On/Off controller	PIM Module (Pulse Interface Module	LonWorks Gateway	External Contact Interface Module
MCM-A00N	MIM-D01AN	MIM-B17BN	MCM-A300N	MCM-A202DN	MIM-B16N	MIM-B18BN	MIM-B14

Dimensional drawings

HVM Chiller

AG042/056/070KSVANH/EU

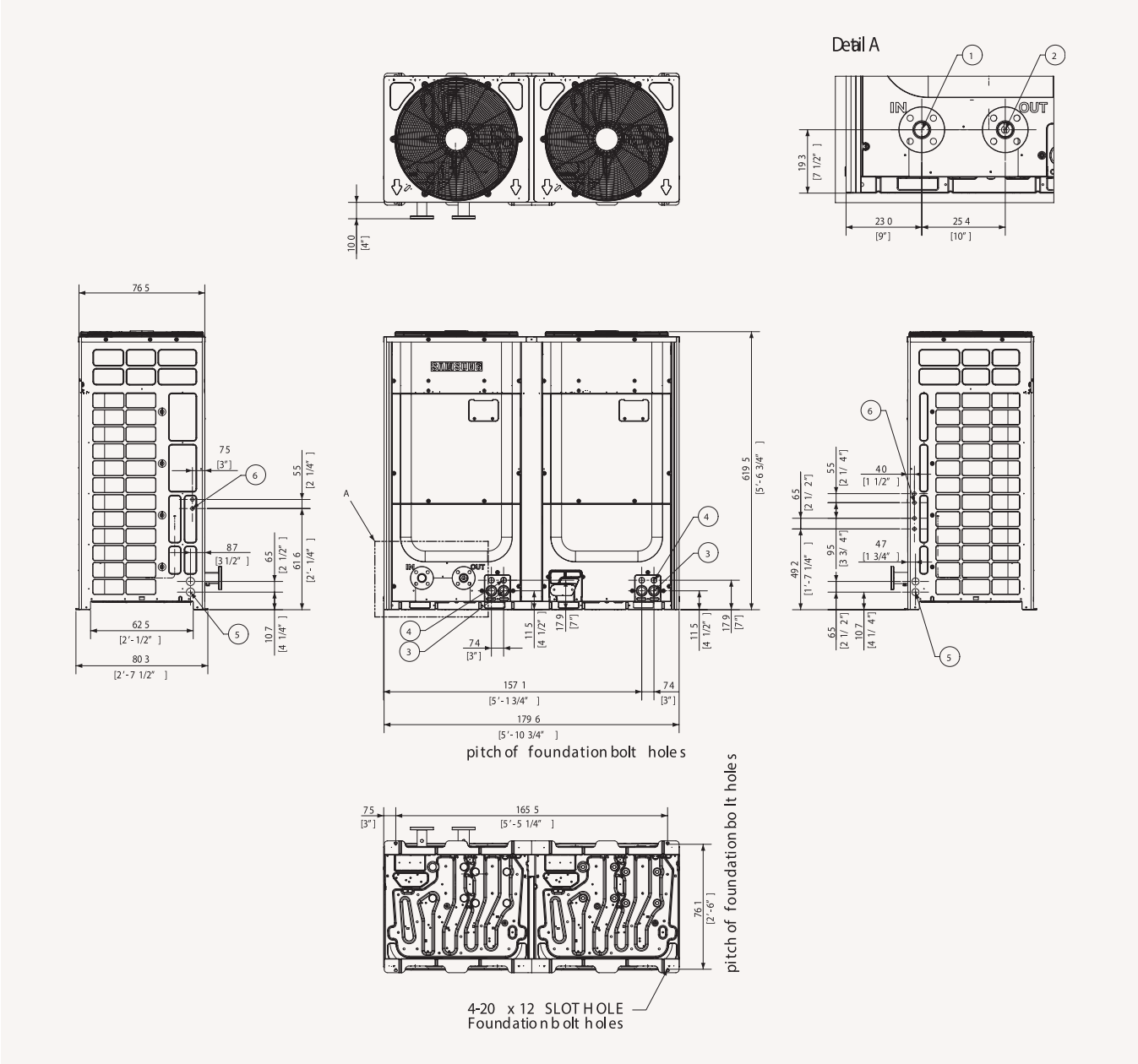

NO	Name	Description
1	Inlet water flange	15/20 HP 40A Din Flange, 25 HP: 50A Din Flange
2	Outlet water flange	15/20 HP 40A Din Flange, 25 HP: 50A Din Flange
3	Power wiring conduits	Knock-out hole (front)
4	Communication wiring conduits	Knock-out hole (front)
5	Power wiring conduits	Knock-out hole (side)
6	Communication wiring conduits	Knock-out hole (side)

Specifications

WindFree™ 1-Way Cassette FCU

- One-way air supply by means of a 100 mm wide blade.
- Cross-flow fan direct driven by a BLDC motor.
- Built-in condensation drain pump.
- Optional 3-Way valve kit.
- Available in WindFree™ function.
- Can be controlled by Smartphone via Wi-Fi Kit.

Model				AG026TN1DKH/EU	AG032TN1DKH/EU	AG042TN1DKH/EU
Power Supply			Φ, V, Hz	1Φ, 220~240 V, 50/60 Hz	1Φ, 220~240 V, 50/60 Hz	1Φ, 220~240 V, 50/60 Hz
Mode			-	HP	HP	HP
Performance	Capacity (Nominal)	Cooling	kW	2.60	3.00	4.20
		Heating	kW	2.90	3.40	5.00
Power	Power Input (Nominal)	Cooling	W	27	35	55
		Heating	W	27	35	55
	Current Input (Nominal)	Cooling	A	0.14	0.19	0.29
		Heating	A	0.14	0.19	0.29
Heat Exchanger	Type		-	Fin & tube	Fin & tube	Fin & tube
Fan	Type		-	Crossflow fan	Crossflow fan	Crossflow fan
	Number of Fans		ea	1	1	1
	Airflow Rate	H/M/L	m^3/min	6.8/5.8/4.9	7.8/6.8/5.8	14.6/12.6/10.7
Fan Motor	Type		-	BLDC	BLDC	BLDC
	Output x n		W	27 x 1	27 x 1	65 x 1
Water	Water Flow Rate	Cooling	l/min	7.5	9.6	11.9
	Water Flow Rate	Heating	l/min	8.4	9.7	14.4
	Pressure Drop	Cooling	kPa	23.0	34.5	45.0
	Pressure Drop	Heating	kPa	28.0	35.8	64.6
Piping Connections	Liquid Pipe (IN)		Type	PF MALE	PF MALE	PF MALE
			ø, mm (inch)	20A (3/4")	20A (3/4")	20A (3/4")
	Liquid Pipe (OUT)		Type	PF MALE	PF MALE	PF MALE
			ø, mm (inch)	20A (3/4")	20A (3/4")	20A (3/4")
	Heat Insulation		-	Both inlet/outlet pipes	Both inlet/outlet pipes	Both inlet/outlet pipes
	Drain Pipe		ø, mm	VP20 (OD 26, ID 20)	VP20 (OD 26, ID 20)	VP25 (OD 32, ID 25)
Sound	Sound Pressure[1]	(H/M/L)	dB(A)	33/31/29	38/35/31	40/37/33
	Sound Power	Cooling	dB(A)	50	53	59
Dimensions	Net Weight		kg	10.1	10.1	14.0
	Net Dimensions (W × H × D)		mm	970 × 135 × 410	970 × 135 × 410	1,200 × 138 × 450
Casing	Material		-	Plastic	Plastic	Plastic
Panel	Panel Model		-	PC1NWFMBN(WindFree™)	PC1NWFMBN(WindFree™)	PC1BWFMBN(WindFree™)
Additional Accessories	Drain Pump	Type	-	Built-in	Built-in	Built-in
		Max. Lifting Height/ Displacement	mm/(cc/ min)	750/400	750/400	750/400
	3-Way Valve Kit (optional)		-	ACL-A60V3	ACL-A60V3	ACL-A60V3
	Filter		-			

Accessories						
Panel WindFree™ (optional)	Panel WindFree™ (optional)	FCU Interface Module	Wireless Remote Controller	Simple Type Controller	Touch Controller	Wired Remote Controller
PC1NWFMBN	PC1BWFMBN	MIM-F10N	AR-EH03E	MWR-SH00N	MWR-SH11N	MWR-WG00*N

Cooling: Indoor temperature 27 °C DB, 19 °C WB/Water In/Out temperature 7 °C, 12 °C Heating: Indoor temperature 20 °C DB, 15 °C WB/Water In/Out temperature 45 °C, 40 °C.
Sound level was acquired in an anechoic room. Thus actual noise level may be different depending on the installation conditions.
Specifications may be subject to change without prior notice.
Select wire size based on the Minimum Circuit Ampacity (MCA) value.

Dimensional drawings

WindFree™ 1-Way Cassette FCU

AG026/032TN1DKH/EU

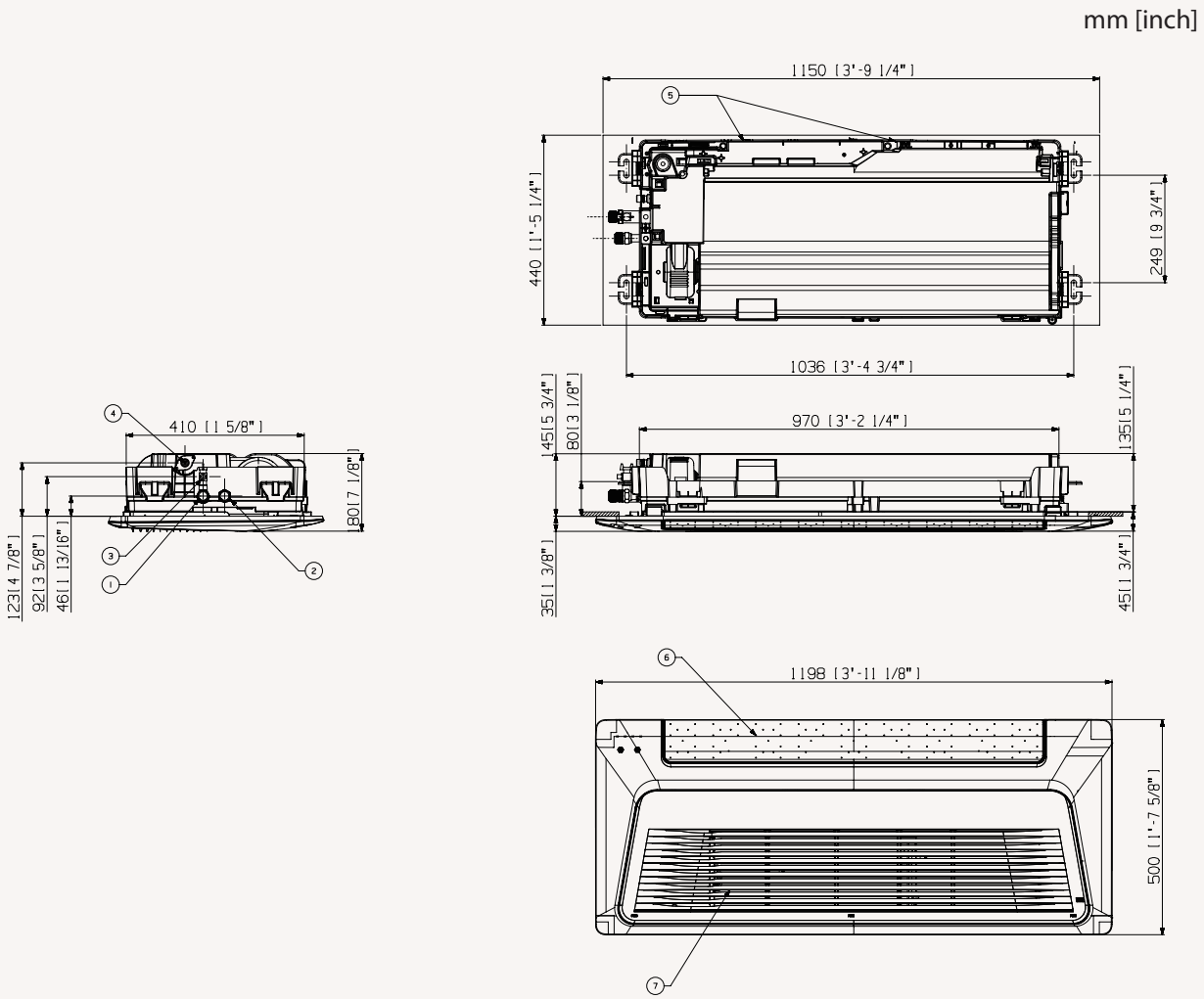

NO	Name	Description
1	Water pipe connection out	PF Male 3/4" (20A)
2	Water pipe connection in	PF Male 3/4" (20A)
3	Air vent valve	
4	Drain hose	VP20 (OD 26, ID 20)
5	Power supply/communication wiring conduits	
6	Air discharge part	
7	Air suction part	

Dimensional drawings

WindFree™ 1-Way Cassette FCU

AG042TN1DKH/EU

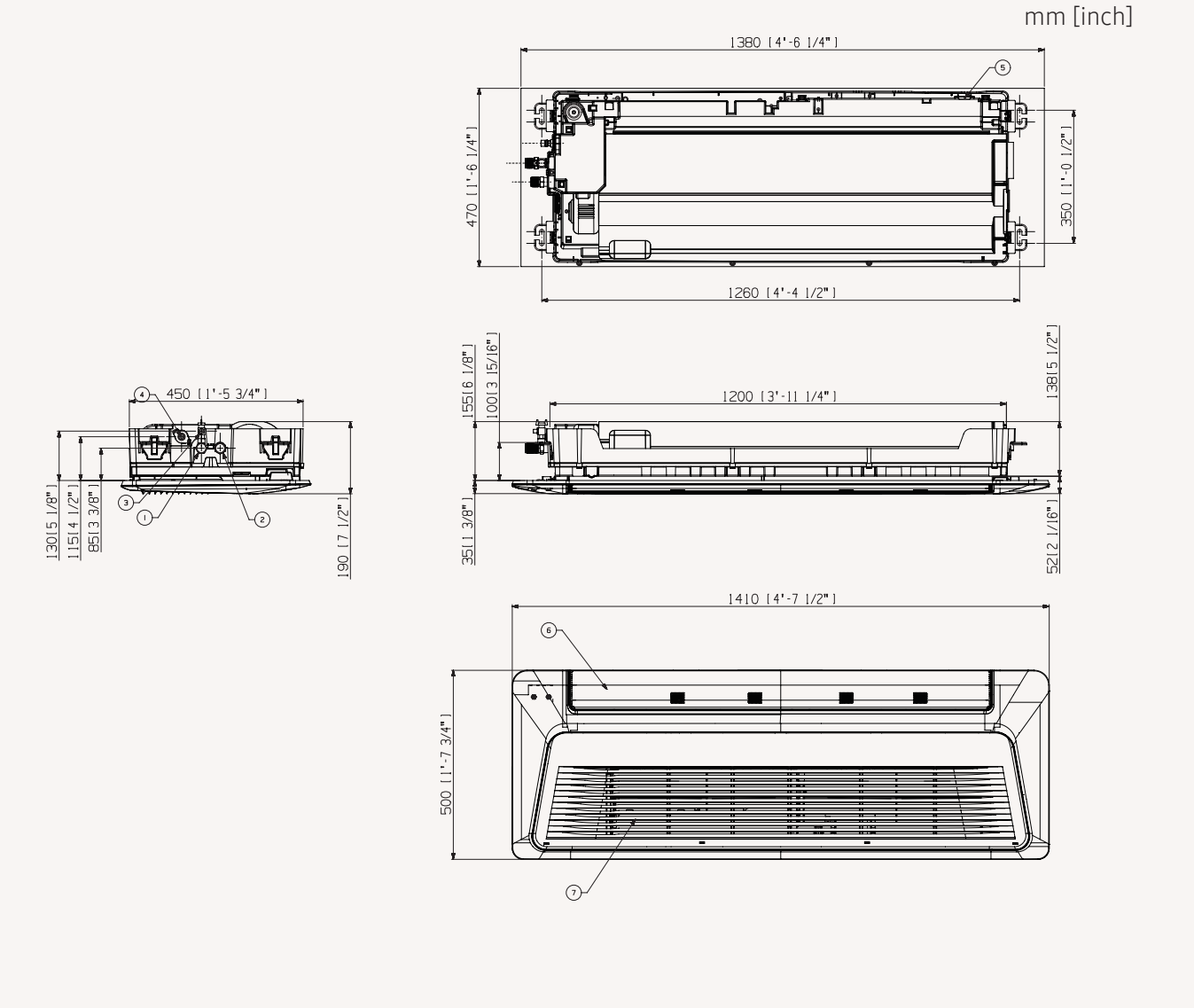

NO	Name	Description
1	Water pipe connection out	PF Male 3/4" (20A)
2	Water pipe connection in	PF Male 3/4" (20A)
3	Air vent valve	
4	Drain hose	VP25 (OD 32, ID 25)
5	Power supply/communication wiring conduits	
6	Air discharge part	
7	Air suction part	

Specifications

WindFree™ 4-Way Cassette FCU

- Four-way air supply via independently adjustable blades.
- Direct drive fan powered by a BLDC motor.
- Built-in condensation drain pump.
- Optional 3-Way valve kit.
- Can be controlled by Smartphone via Wi-Fi Kit.
- Available in WindFree™ function.

Model				AG060AN4DKH/EU	AG072AN4DKH/EU	AG090AN4DKH/EU	AG105AN4DKH/EU
Power Supply			Φ, V, Hz	1Φ, 220~240 V, 50/60 Hz	1Φ, 220~240 V, 50/60 Hz	1Φ, 220~240 V, 50/60 Hz	1Φ, 220~240 V, 50/60 Hz
Mode			-	HP	HP	HP	HP
Performance	Capacity (Nominal)	Cooling	kW	6.0	7.2	9.0	10.0
		Heating	kW	7.3	8.5	10.0	10.7
Power	Power Input (Nominal)	Cooling	W	50	73	82	99
		Heating	W	50	73	82	99
	Current Input (Nominal)	Cooling	A	0.37	0.50	0.58	0.79
		Heating	A	0.37	0.50	0.58	0.79
Heat Exchanger	Type		-	Fin & tube	Fin & tube	Fin & tube	Fin & tube
Fan	Type		-	Turbo Fan	Turbo Fan	Turbo Fan	Turbo Fan
	Number of Fans		-	1	1	1	1
	Airflow Rate	H/M/L	m^3/min	18.9/16.5/13.6	21.3/18.2/13.6	23.3/21.3/19.4	30.1/26.2/19.4
Fan Motor	Type		-	BLDC	BLDC	BLDC	BLDC
	Output x n		W	65 x 1	65 x 1	97 x 1	97 x 1
Water	Water Flow Rate	Cooling	l/min	17.5	20.8	26.0	28.9
	Water Flow Rate	Heating	l/min	21.1	24.5	28.9	30.9
	Pressure Drop	Cooling	kPa	27.0	36.0	46.8	56.3
	Pressure Drop	Heating	kPa	37.3	48.6	56.3	63.4
Piping Connections	Liquid Pipe (IN)		Type	PF MALE	PF MALE	PF MALE	PF MALE
			ø, mm (inch)	20A (3/4)	20A (3/4)	20A (3/4)	20A (3/4)
	Liquid Pipe (OUT)		Type	PF MALE	PF MALE	PF MALE	PF MALE
			ø, mm (inch)	20A (3/4)	20A (3/4)	20A (3/4)	20A (3/4)
	Heat Insulation		-	Both inlet/outlet pipes	Both inlet/outlet pipes	Both inlet/outlet pipes	Both inlet/outlet pipes
	Drain Pipe		ø, mm	VP25 (OD 32, ID 25)	VP25 (OD 32, ID 25)	VP25 (OD 32, ID 25)	VP25 (OD 32, ID 25)
Sound	Sound Pressure	(H/M/L)	dB(A)	37/33/30	41/36/30	42/39/36	45/41/37
	Sound Power	Cooling	dB(A)	56	60	58	60
Dimensions	Net Weight		kg	15.5	15.5	18.0	18.0
	Net Dimensions (W × H × D)		mm	840 x 204 x 840	840 x 204 x 840	840 × 246 × 840	840 × 246 × 840
Panel	Panel Model		-	PC4NUFMAN	PC4NUFMAN	PPC4NUFMAN	PC4NUFMAN
Additional Accessories	Drain Pump	Type	-	Built-in	Built-in	Built-in	Built-in
		Max. Lifting Height/ Displacement	mm/(cc/ min)	750/400	750/400	750/400	750/400
	3-Way Valve Kit (optional)			ACL-A60V3	ACL-A60V3	ACL-A60V3	ACL-A60V3
	Filter		-	Microfibrous filter	Microfibrous filter	Microfibrous filter	Microfibrous filter

Accessories

Panel WindFree™	FCU Interface Module	Wireless Remote Controller	Simple Type Controller	Touch Controller	Wired Remote Controller
PC4NUFMAN	MIM-F10N	AR-EH03E	MWR-SH00N	MWR-SH11N	MWR-WG00*N

Cooling: Indoor temperature 27 °C DB, 19 °C WB/Water In/Out temperature 7 °C, 12 °C Heating: Indoor temperature 20 °C DB, 15 °C WB/Water In/Out temperature 45 °C, 40 °C.
Sound level was acquired in an anechoic room. Thus actual noise level may be different depending on the installation conditions.
Specifications may be subject to change without prior notice.
Select wire size based on the Minimum Circuit Ampacity (MCA) value.

Dimensional drawings

WindFree™ 4-Way Cassette FCU

AG060/072/090/105AN4DKH/EU

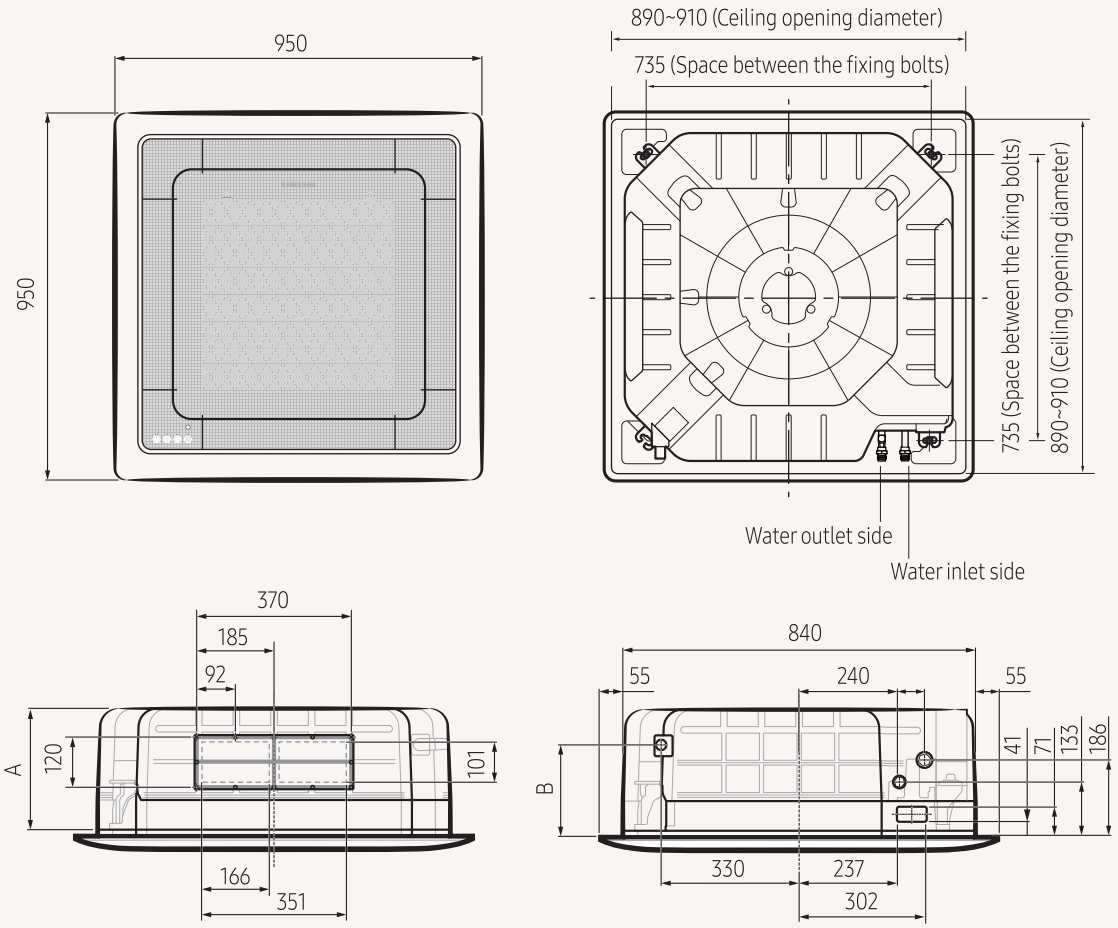

The sub duct hole is not applicable to the WindFree™ models.

Category		Type A	Type B
Model		AG060⁎N4DKH⁎	AG090⁎N4DKH⁎
		AG072⁎N4DKH⁎	AG105⁎N4DKH⁎
A	(mm)	204	246
B	(mm)	196	222
Connection port	(mm)	PF 3/4" Male	
Flexible hose connection port	(mm)	VP25 (outer diameter: Ø32, inner diameter: Ø25)	

Specifications

360 Cassette FCU

- 360 degree air supply.
- Bladeless discharge. Booster fans can be individually controlled, allowing for completely horizontal flow discharge. Coandă effect is created even without ceiling.
- 3-Way valve kit (optional).
- A front panel is mandatory and can be selected from one of the 4 front panels mentioned in the accessories.
- Can be controlled by Smartphone via Wi-Fi Kit.
- Built-in condensation drain pump.
- Predisposition of the air inlet to let fresh air in.
- Circular or square cassette panel.
- Optional Motion Detect Sensor.

Model				AG060MN4PKH/EU	AG072MN4PKH/EU	AG090MN4PKH/EU	AG105MN4PKH/EU
Power Supply			Φ, V, Hz	1Φ, 220~240 V, 50/60 Hz	1Φ, 220~240 V, 50/60 Hz	1Φ, 220~240 V, 50/60 Hz	1Φ, 220~240 V, 50/60 Hz
Mode			-	HP	HP	HP	HP
Performance	Capacity (Nominal)	Cooling	kW	6.0	7.2	9.0	10.0
		Heating	kW	7.3	8.5	10.0	10.7
Power	Power Input (Nominal)	Cooling	W	58	58	77	100
		Heating	W	58	58	77	100
	Current Input (Nominal)	Cooling	A	0.50	0.50	0.62	0.79
		Heating	A	0.50	0.50	0.62	0.79
Heat Exchanger	Type		-	Fin & tube	Fin & tube	Fin & tube	Fin & tube
Fan	Type		-	Turbo Fan	Turbo Fan	Turbo Fan	Turbo Fan
	Number of Fans		ea	1	1	1	1
	Airflow Rate	H/M/L	m^3/min	21.0/17.5/15.0	25.5/22.0/19.8	29.5/24.0/19.8	31.5/22.5/19.8
Fan Motor	Type		-	BLDC	BLDC	BLDC	BLDC
	Output x n		W	65 x 1	97 x 1	97 x 1	97 x 1
Water	Water Flow Rate	Cooling	l/min	17.5	20.8	26.0	28.9
	Water Flow Rate	Heating	l/min	21.1	24.5	28.9	30.9
	Pressure Drop	Cooling	kPa	27.0	26.0	38.5	47.4
	Pressure Drop	Heating	kPa	37.6	35.6	47.4	53.2
Piping Connections	Liquid Pipe (IN)		Type	PF MALE	PF MALE	PF MALE	PF MALE
			ø, mm (inch)	20A (3/4)	20A (3/4)	20A (3/4)	20A (3/4)
	Liquid Pipe (OUT)		Type	PF MALE	PF MALE	PF MALE	PF MALE
			ø, mm (inch)	20A (3/4)	20A (3/4)	20A (3/4)	20A (3/4)
	Heat Insulation		-	Both inlet/outlet pipes	Both inlet/outlet pipes	Both inlet/outlet pipes	Both inlet/outlet pipes
	Drain Pipe		ø, mm	VP25 (OD 32, ID 25)	VP25 (OD 32, ID 25)	VP25 (OD 32, ID 25)	VP25 (OD 32, ID 25)
Sound	Sound Pressure	(H/M/L)	dB(A)	40/37/32	39/35/33	43/38/33	45/39/33
	Sound Power	Cooling	dB(A)	57	58	60	62
Dimensions	Net Weight		kg	21.0	25.0	25.0	25.0
	Net Dimensions (W × H × D)		mm	947 x 281 x 947	947 x 365 x 947	947 x 365 x 947	947 x 365 x 947
Casing	Material		-	-	-	-	-
Panel	Panel Model		White	PC4NUDMAN	PC4NUDMAN	PC4NUDMAN	PC4NUDMAN
				PC4NUNMAN	PC4NUNMAN	PC4NUNMAN	PC4NUNMAN
			Black	PC4NBDMAN	PC4NBDMAN	PC4NBDMAN	PC4NBDMAN
				PC4NBNMAN	PC4NBNMAN	PC4NBNMAN	PC4NBNMAN
Additional Accessories	Drain Pump	Type	-	Built-in	Built-in	Built-in	Built-in
		Max. Lifting Height/ Displacement	mm/(cc/ min)	750/400	750/400	750/400	750/400
		3-Way Valve Kit	(optional)	ACL-A60V3	ACL-A60V3	ACL-A60V3	ACL-A60V3
	Filter		-	Microfibrous filter	Microfibrous filter	Microfibrous filter	Microfibrous filter

Accessories

Panel (Mandatory)	Panel (Mandatory)	Panel (Mandatory)	Panel (Mandatory)	FCU Interface Module	Wireless Remote Controller	Touch Controller	Wired Remote Controller	Simple Type Controller	Motion Detect Sensor (Optional)
PC4NBDMAN	PC4NBNMAN	PC4NUDMAN	PC4NUNMAN	MIM-F10N	AR-EH03E	MWR-SH11N	MWR-WG00*N	MWR-SH00N	MCR-SME

Cooling: Indoor temperature 27 °C DB, 19 °C WB/Water In/Out temperature 7 °C, 12 °C Heating: Indoor temperature 20 °C DB, 15 °C WB/Water In/Out temperature 45 °C, 40 °C.
Sound level was acquired in an anechoic room. Thus actual noise level may be different depending on the installation conditions.
Specifications may be subject to change without prior notice.
Select wire size based on the Minimum Circuit Ampacity (MCA) value.

Dimensional drawings

360 Cassette FCU

AG060/072/090/105MN4PKH/EU

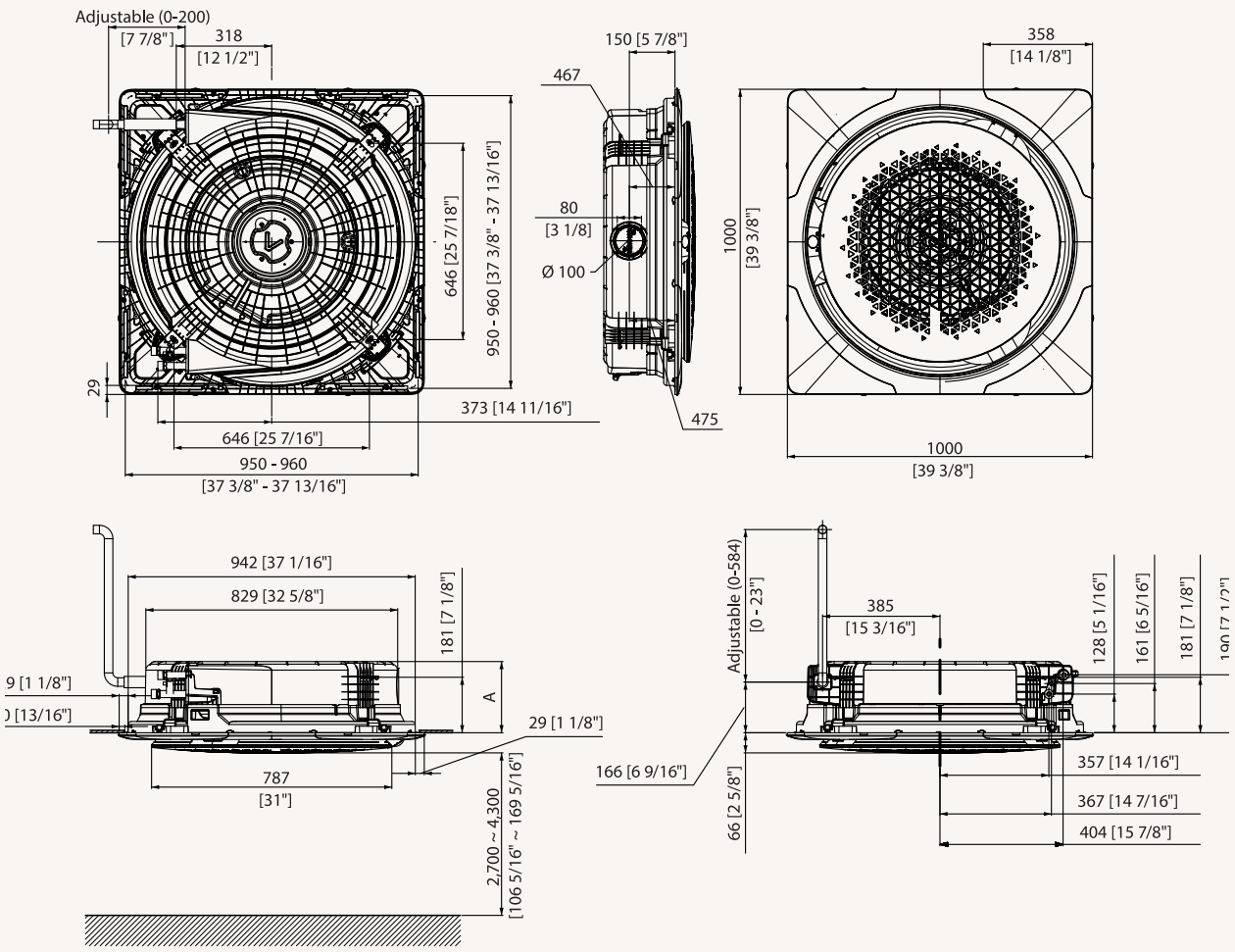

Pos.	A Type	B Type
Model	AG060MN4PKH/EU	AG072MN4PKH/EU
		AG090MN4PKH/EU
		AG105MN4PKH/EU
A	233 [9 3/16]	317 [12 1/2]
Pipe connection	PF 3/4 Male	
Drain pipe connection	VP25 (OD 32, ID 25)	

Dimensional drawings

360 Cassette FCU

AG060/072/090/105MN4PKH/EU

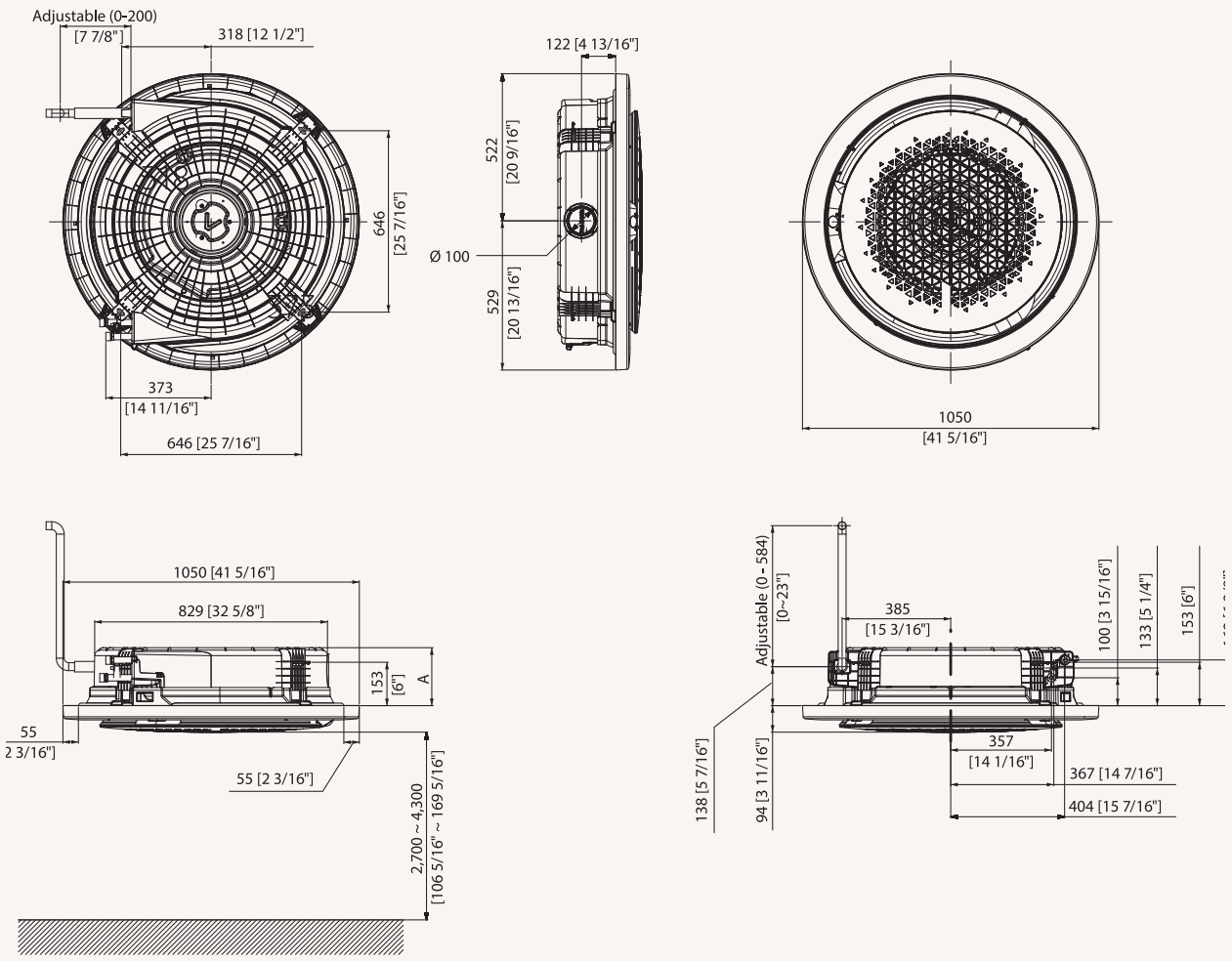

Pos.	A Type	B Type
Model	AG060MN4PKH/EU	AG072MN4PKH/EU
		AG090MN4PKH/EU
		AG105MN4PKH/EU
A	205	289
Pipe connection	PF 3/4 Male	
Drain pipe connection	VP25 (OD 32, ID 25)	

SAÍDA
EXIT

Specifications

Concealed FCU

- Plug & play solution in combination with HVM Chiller.
- Optional vertical or horizontal installation.
- 3-Way valve kit included as standard.
- FCU kit included as standard.
- Optional drain pipe.
- Optional heating coil 4-pipe.
- Optional 3-way valve kit 4-pipe.
- Auxilary Drain Pan vertical/horizontal.

Model				ACL-18DF	ACL-25DF	ACL-35DF
Power Supply			Φ, V, Hz	1Φ, 220~240 V, 50/60 Hz	1Φ, 220~240 V, 50/60 Hz	1Φ, 220~240 V, 50/60 Hz
Mode			-	HP	HP	HP
Performance	Capacity (Nominal)	Cooling (H/M/L)	kW	1.91/1.66/1.34	2.87/2.34/1.73	4.24/3.20/2.47
		Heating (H/M/L)	kW	2.15/1.81/1.50	2.91/2.35/1.73	4.24/3.24/2.47
Power	Power Input (Nominal)	Cooling (H/M/L)	W	53/36/24	56/43/29	90/50/40
		Heating (H/M/L)	W	53/36/24	56/43/29	90/50/40
	Current Input (Nominal)	Cooling	A	0.26	0.28	0.45
		Heating	A	0.26	0.28	0.45
Heat Exchanger	Type		-	Fin & tube	Fin & tube	Fin & tube
Fan	Type		-	Double suction centrifugal fan	Double suction centrifugal fan	Double suction centrifugal fan
	Number of Fans		ea	2	2	2
	Airflow Rate	H/M/L	m^3/min	5.7/4.5/3.5	7.6/5.7/4.0	11.7/8.3/6.0
Fan Motor	Type		-	3-step AC	3-step AC	3-step AC
	Output x n		W	53/36/24	56/43/29	90/50/40
Water	Water Flow Rate	Cooling	l/min	5.6	8.4	12.4
		Heating	l/min	6.2	8.4	12.4
	Pressure Drop	Cooling	kPa	17	24	35
		Heating	kPa	20	24	35
Piping Connections	Liquid Pipe (IN)	Type	-	Female	Female	Female
		Dimension	ø, mm (inch)	1/2	1/2	1/2
	Liquid Pipe (OUT)	Type	-	Female	Female	Female
		Dimension	ø, mm (inch)	1/2	1/2	1/2
	Heat Insulation		-	-	-	-
	Drain Pipe		ø, mm	-	-	-
Sound	Sound Pressure	(H/M/L)	dB(A)	42/36/32	40/34/28	45/35/27
	Sound Power	(H/M/L)	dB(A)	50/44/40	48/42/36	53/43/35
Dimensions	Net Weight		kg	18.0	23.0	27.0
	Net Dimensions (W × H × D)		mm	725 x 224 x 535	935 x 224 x 535	1,145 x 224 x 535
Casing	Material		-	-	-	-
Panel	Panel Model		-	-	-	-
Additional Accessories	Drain Pump	Type	optional	ACL-ADP	ACL-ADP	ACL-ADP
		Max. Lifting Height/Displacement	mm/ (cc/min)	750/133	750/133	750/133
	Heating Coil	4-pipe	optional	ACL-A018HC	ACL-A025HC	ACL-A035HC
	3-Way Valve	4-pipe	optional	ACL-A018V3	ACL-A018V3	ACL-A018V3
	Auxiliary Drain Pan	Vertical	optional	ACL-ADV	ACL-ADV	ACL-ADV
		Horizontal	optional	ACL-ADH	ACL-ADH	ACL-ADH
	Filter		-	Polypropylene washable	Polypropylene washable	Polypropylene washable

Accessories				
FCU Interface Module	FCU Kit	Touch Controller	Wired Remote Controller	Simple Type Controller
MIM-F10N	MIM-F00N	MWR-SH11N	MWR-WG00*N	MWR-SH00N

Cooling: Indoor temperature 27 °C DB, 19 °C WB/Water In/Out temperature 7 °C, 12 °C Heating: Indoor temperature 20 °C DB, 15 °C WB/Water In/Out temperature 45 °C, 40 °C.
Sound level was acquired in an anechoic room. Thus actual noise level may be different depending on the installation conditions.
Specifications may be subject to change without prior notice.
Select wire size based on the Minimum Circuit Ampacity (MCA) value.

ACL-55DF	ACL-65DF
1Φ, 220~240 V, 50/60 Hz	1Φ, 220~240 V, 50/60 Hz
HP	HP
7.19/5.69/4.32	7.78/6.07/4.00
7.19/5.69/4.32	8.37/6.53/4.39
182/127/86	244/169/109
182/127/86	244/169/109
0.90	1.20
0.90	1.20
Fin & tube	Fin & tube
Double suction centrifugal fan	Double suction centrifugal fan
3	3
16.8/12.8/9.5	23.2/17.0/10.7
3-step AC	3-step AC
182/127/86	244/169/109
21.1	22.9
20.2	24.2
39	42
35	47
Female	Female
3/4	3/4
Female	Female
3/4	3/4
-	-
-	-
53/46/39	59/52/41
61/54/47	67/60/49
37.0	37.0
1,355 x 249 x 535	1,355 x 249 x 535
-	-
-	-
ACL-ADP	ACL-ADP
750/133	750/133
ACL-A055HC	ACL-A055HC
ACL-A055V3	ACL-A055V3
ACL-ADV	ACL-ADV
ACL-ADH	ACL-ADH
Polypropylene washable	Polypropylene washable

Dimensional drawings

Concealed FCU

ACL-**DF

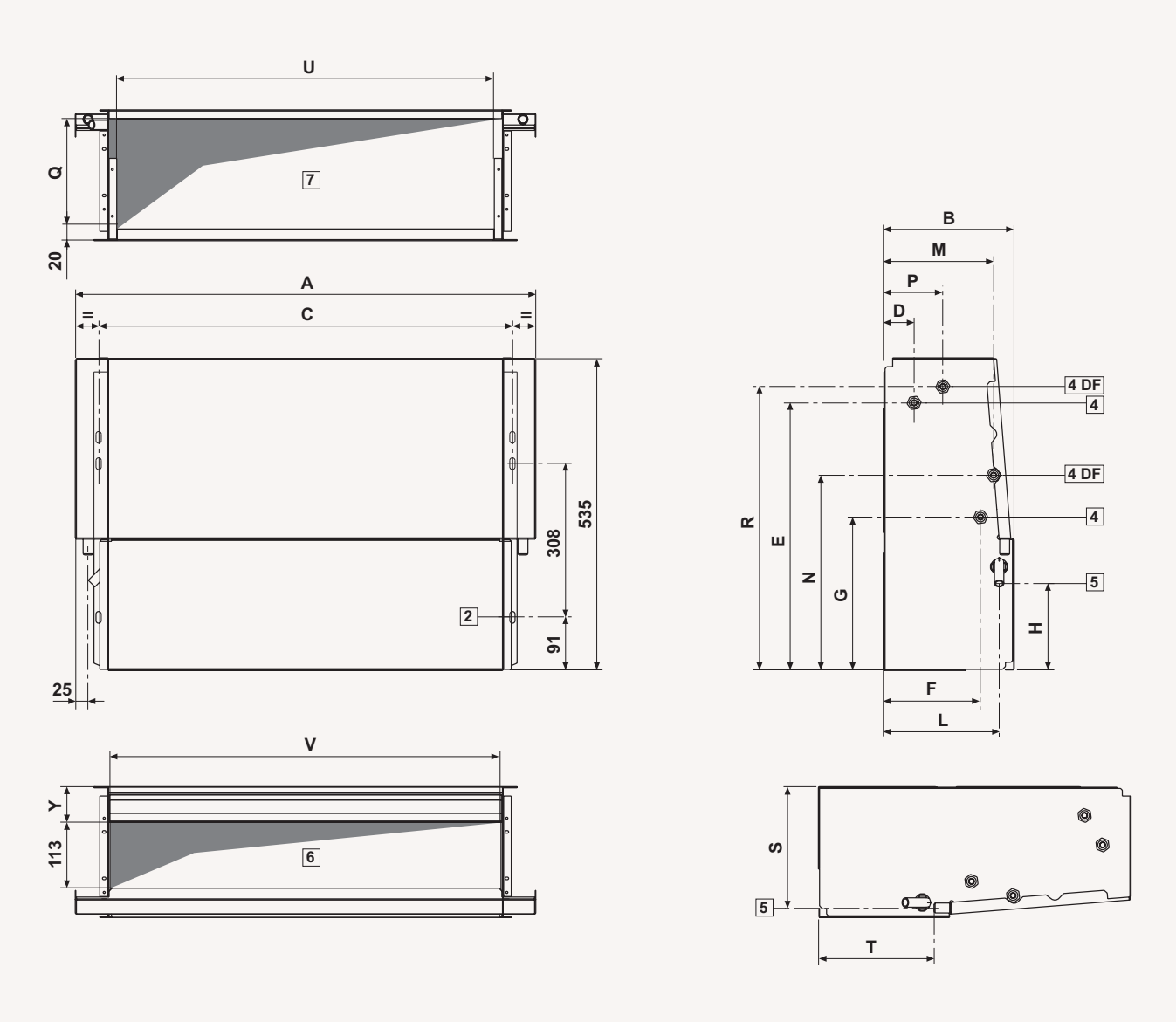

NO	Name	Description
1	Water pipe connection out	PF Male 3/4 (20A)
2	Water pipe connection in	PF Male 3/4 (20A)
3	Air vent valve	
4	Drain hose	VP25 (OD 32, ID 25)
5	Power supply/communication wiring conduits	
6	Air discharge part	
7	Air suction part	

MODEL	A	B	C	H	L	S	T	Y
ACL-18DH	584	224	498	149	198	208	198	61
ACL-25DH	794	224	708	149	198	208	198	61
ACL-35DH	1004	224	918	149	198	208	198	61
ACL-55DH	1214	249	1128	155	220	234	208	67
ACL-65DH	1214	249	1128	155	220	234	208	67

129C

Specifications

Cased FCU

- Plug & play solution in combination with HVM Chiller.
- Optional vertical or horizontal installation.
- 3-Way valve kit included as standard.
- FCU kit included as standard.
- Optional drain pipe.
- Optional heating coil 4-pipe.
- Optional 3-Way valve kit 4-pipe.
- Auxiliary Drain Pan vertical/horizontal.

Model				ACL-18DG	ACL-25DG	ACL-35DG
Power Supply			Φ, V, Hz	1Φ, 220~240 V, 50/60 Hz	1Φ, 220~240 V, 50/60 Hz	1Φ, 220~240 V, 50/60 Hz
Mode			-	HP	HP	HP
Performance	Capacity (Nominal)	Cooling (H/M/L)	kW	1.91/1.66/1.34	2.87/2.34/1.73	4.24/3.20/2.47
		Heating (H/M/L)	kW	2.15/1.81/1.50	2.91/2.35/1.73	4.24/3.24/2.47
Power	Power Input (Nominal)	Cooling (H/M/L)	W	53/36/24	56/43/29	90/50/40
		Heating (H/M/L)	W	53/36/24	56/43/29	90/50/40
	Current Input (Nominal)	Cooling	A	0.26	0.28	0.45
		Heating	A	0.26	0.28	0.45
Heat Exchanger	Type		-	Fin & tube	Fin & tube	Fin & tube
Fan	Type		-	Double suction centrifugal fan	Double suction centrifugal fan	Double suction centrifugal fan
	Number of Fans		-	2	2	2
	Airflow Rate	H/M/L	m^3/min	5.7/4.5/3.5	7.6/5.7/4.0	11.7/8.3/6.0
Fan Motor	Type		-	3-step AC	3-step AC	3-step AC
	Output x n		W	53/36/24	56/43/29	90/50/40
Water	Water Flow Rate	Cooling	l/min	5.6	8.4	12.4
		Heating	l/min	6.2	8.4	12.4
	Pressure Drop	Cooling	kPa	17	24	35
		Heating	kPa	20	24	35
Piping Connections	Liquid Pipe (IN)	Type	-	Female	Female	Female
		Dimension	ø, mm (inch)	1/2	1/2	1/2
	Liquid Pipe (OUT)	Type	-	Female	Female	Female
		Dimension	ø, mm (inch)	1/2	1/2	1/2
	Heat Insulation		-	-	-	-
	Drain Pipe		ø, mm	-	-	-
Sound	Sound Pressure	(H/M/L)	dB(A)	42/36/32	40/34/28	45/35/27
	Sound Power	(H/M/L)	dB(A)	50/44/40	48/42/36	53/43/35
Dimensions	Net Weight		kg	22.0	29.0	35.0
	Net Dimensions (W x H x D)		mm	774x564x226	984x564x226	1,194x564x226
Casing	Material		-	-	-	-
Panel	Panel Model		-	-	-	-
Additional Accessories	Drain Pump	Type	optional	ACL-ADP	ACL-ADP	ACL-ADP
		Max. Lifting Height/Displacement	mm / (cc/min)	750/133	750/133	750/133
	Heating Coil	4-pipe	optional	ACL-A018HC	ACL-A025HC	ACL-A035HC
	3-Way Valve	4-pipe	optional	ACL-A018V3	ACL-A018V3	ACL-A018V3
	Auxiliary Drain Pan	Vertical	optional	ACL-ADV	ACL-ADV	ACL-ADV
	Auxiliary Drain Pan	Horizontal	optional	ACL-ADH	ACL-ADH	ACL-ADH
	Filter		-	Polypropylene washable	Polypropylene washable	Polypropylene washable

Accessories				
FCU Interface Module	FCU Kit	Touch Controller	Wired Remote Controller	Simple Type Controller
MIM-F10N	MIM-F00N	MWR-SH11N	MWR-WG00*N	MWR-SH00N

Cooling: Indoor temperature 27 °C DB, 19 °C WB/Water In/Out temperature 7 °C, 12 °C Heating: Indoor temperature 20 °C DB, 15 °C WB/Water In/Out temperature 45 °C, 40 °C.
Sound level was acquired in an anechoic room. Thus actual noise level may be different depending on the installation conditions.
Specifications may be subject to change without prior notice.
Select wire size based on the Minimum Circuit Ampacity (MCA) value.

ACL-55DG	ACL-65DG
1Φ, 220~240 V, 50/60 Hz	1Φ, 220~240 V, 50/60 Hz
HP	HP
7.19/5.69/4.32	7.78/6.07/4.00
7.19/5.69/4.32	8.37/6.53/4.39
182/127/86	244/169/109
182/127/86	244/169/109
0.90	1.20
0.90	1.20
Fin & tube	Fin & tube
Double suction centrifugal fan	Double suction centrifugal fan
3	3
16.8/12.8/9.5	23.2/17.0/10.7
3-step AC	3-step AC
182/127/86	244/169/109
21.1	22.9
20.2	24.2
39	42
35	47
Female	Female
3/4	3/4
Female	Female
3/4	3/4
-	-
-	-
53/46/39	59/52/41
61/54/47	67/60/49
45.0	45.0
1,404x564x251	1,404x564x251
-	-
-	-
ACL-ADP	ACL-ADP
750/133	750/133
ACL-A055HC	ACL-A055HC
ACL-A055V3	ACL-A055V3
ACL-ADV	ACL-ADV
ACL-ADH	ACL-ADH
Polypropylene washable	Polypropylene washable

Dimensional drawings

Cased FCU

ACL-**DG

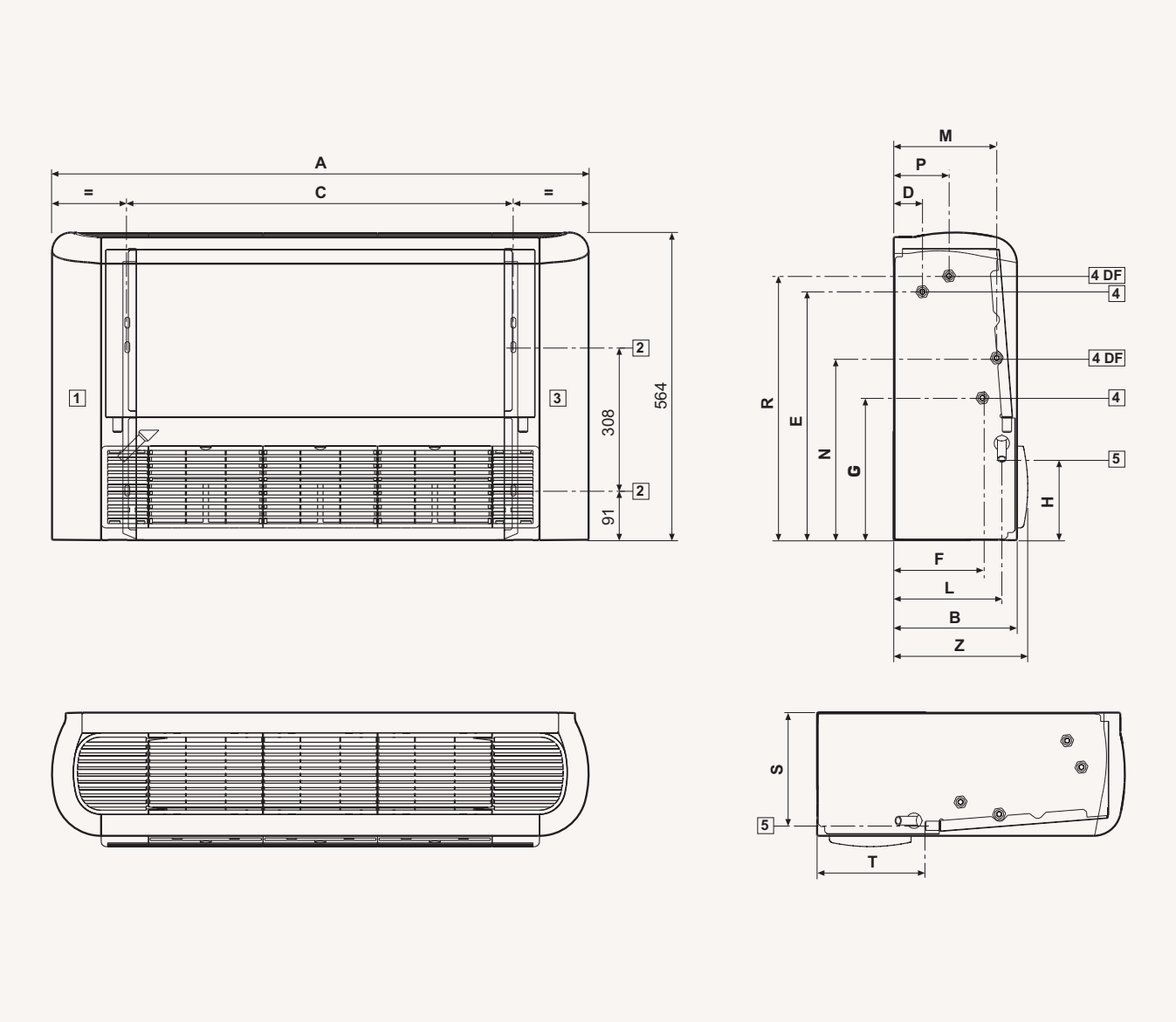

NO	Name	Description
1	Water pipe connection out	PF Male 3/4 (20A)
2	Water pipe connection in	PF Male 3/4 (20A)
3	Air vent valve	
4	Drain hose	VP25 (OD 32, ID 25)
5	Power supply/communication wiring conduits	
6	Air discharge part	
7	Air suction part	

MODEL	A	B	C	H	L	S	T	Z
ACL-18DG	774	226	498	149	198	208	198	246
ACL-25DG	984	226	708	149	198	208	198	246
ACL-35DG	1194	226	918	149	198	208	198	246
ACL-55DG	1404	251	1128	155	220	234	208	271
ACL-65DG	1404	251	1128	155	220	234	208	271

Ventilation

interior design
OFFICE N°55

Specifications

ERV

- Energy recovery ventilation unit.
- Cellulose heat exchanger element.
- High Efficiency (F7 class) air filter.
- Optional CO_2 sensor for automatic regulation.
- Bypass operation mode when there's a small temperature difference between indoor and outdoor environment (automatically or manually operated).
- Interlocking with DVM S indoor units.
- Frost formation prevention without electric heater.

Model					AN026JSKLKN/EU	AN035JSKLKN/EU	AN050JSKLKN/EU	AN080JSKLKN/EU	AN100JSKLKN/EU
Power Supply				Φ, #, V, Hz	1Φ, 2, 220~240 V, 50/60 Hz	1Φ, 2, 220~240 V, 50/60 Hz	1Φ, 2, 220~240 V, 50/60 Hz	1Φ, 2, 220~240 V, 50/60 Hz	1Φ, 2, 220~240 V, 50/60 Hz
Performance	Air Volume			m³/h	260	350	500	800	1,000
	Temperature Exchange Efficiency	Cooling	Turbo/High/Low	%	70/70/74	70/70/74	70/70/74	70/70/74	70/70/74
		Heating	Turbo/High/Low	%	74/74/75	78/78/79	74/74/75	77/77/78	74/74/75
	Effective Enthalpy Exchange Efficiency	Cooling	Turbo/High/Low	%	50/50/55	50/50/55	50/50/55	50/50/55	50/50/55
		Heating	Turbo/High/Low	%	70/70/76	70/70/76	70/70/76	70/70/76	70/70/76
Power	Power Input		Turbo/High/Low	W	115/80/45	115/80/50	175/120/65	330/230/125	450/280/155
	Current Input		Turbo	A	0.7	0.7	1.1	2.1	2.9
Fan	Airflow Rate		Turbo/High/Low	m³/h	260/250/180	350/350/256	500/500/360	800/800/560	1,000/1,000/690
	External Static Pressure		Turbo/High/Low	Pa	100/65/55	155/100/83	165/100/85	155/90/80	155/90/75
Noise Level	Sound Pressure[1]		Turbo/High/Low/ Quiet	dB(A)	31/28/25/22	32/29/26/23	35/32/28/24	36/33/29/25	37/34/30/26
	Sound Power			dB(A)	49	50	53	54	55
Field Wiring	Power Source Wire			mm²	1.5~2.5	1.5~2.5	1.5~2.5	1.5~2.5	1.5~2.5
	Transmission Cable			mm²	0.75~1.50	0.75~1.50	0.75~1.50	0.75~1.50	0.75~1.50
Dimensions	Net Weight			kg	28.5	42.5	42.5	67.0	67.0
	Net Dimensions (W x H x D)			mm	600 x 350 x 660	1,012 x 270 x 1,000	1,012 x 270 x 1,000	1,2220 x 340 x 1,135	1,2220 x 340 x 1,135
	Supply/Return/Exhaust/Outside Duct Flange (ø)			mm	150	200	200	250	250
Air Filter				-	Pre filter	Pre filter	Pre filter	Pre filter	Pre filter

Accessories			
Differential pressure switch[2]	ERV Wired Remote Controller	Wired Remote Controller	CO_2 Sensor
MOS-P1050	MWR-VH12N	MWR-WG00*N	MOS-C1

[1] Sound level was acquired in an anechoic room. Thus actual noise level may be different depending on the installation conditions.
[2] Please order MOS-P1050 separately. Differential pressure switch (model code: MOS-P1050) is a mandatory accessory for all ERV and ERV Plus units in EU countries according to Ecodesign Directive 1253/2014.

Dimensional drawings

ERV

AN026JSKLKN/EU

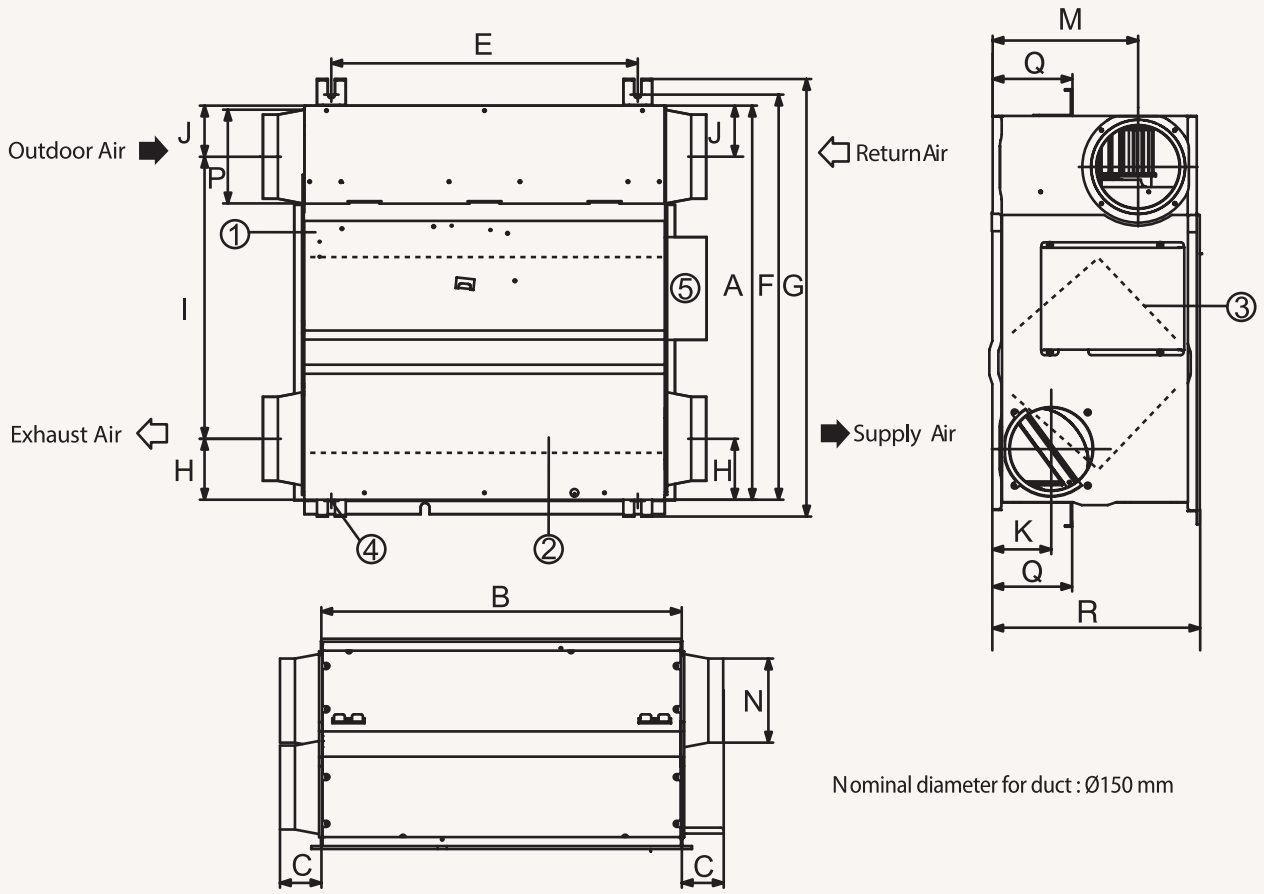

NO	Name	Description
1	Maintenance cover	1
2	Heat exchange element	1
3	Dust filter	2
4	Hanger	4
5	Electrical component box	1

Model	A	B	C	E	F	G	H	I	J	K	M	N	P	Q	R
	Length (mm)										Diameter (mm)		Length (mm)		
026	600	660	70	510	675	729	102	470	85	98	242	140	156	133	350

Dimensional drawings

ERV

035/050 - 080/100

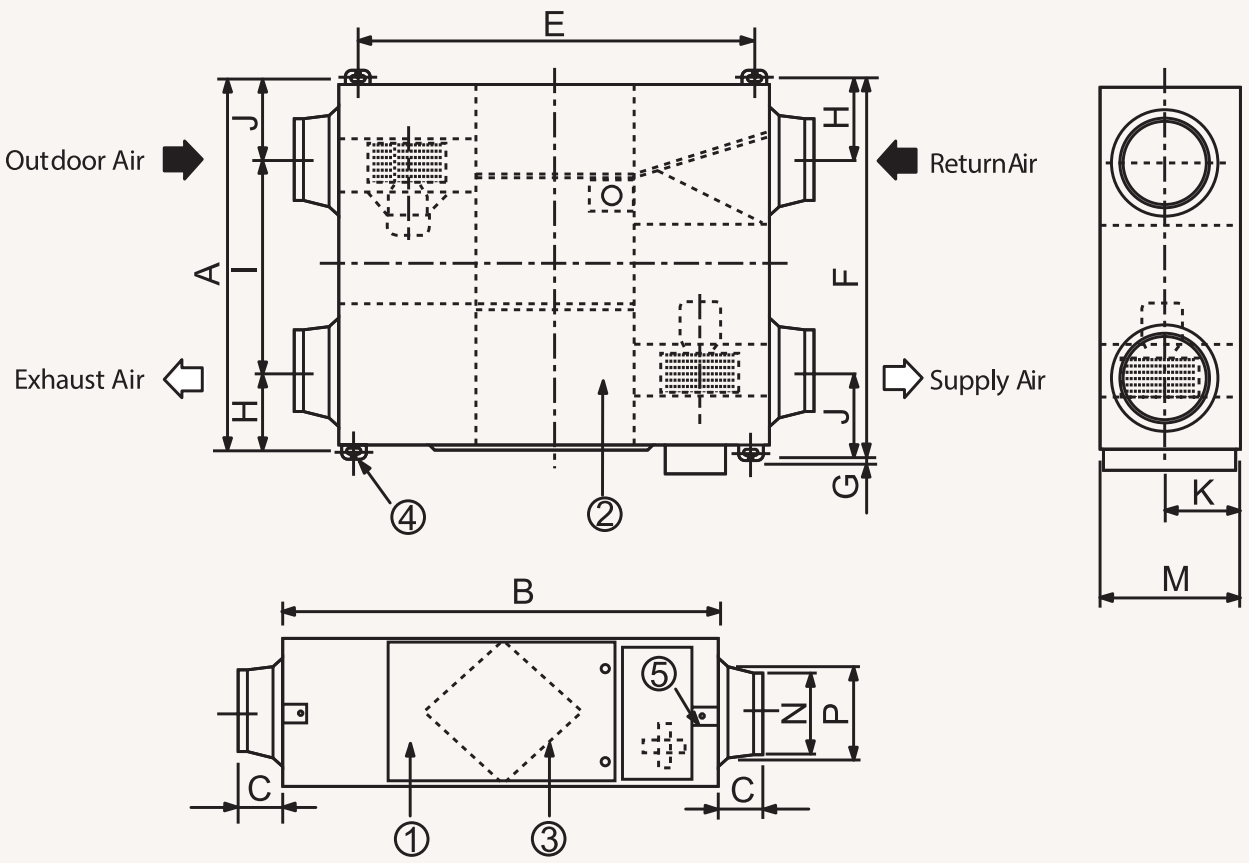

NO	Name	Description
1	Maintenance cover	1
2	Heat exchange element	2
3	Dust filter	4
4	Hanger	4
5	Electrical component box	1

Model	Nominal diameter for duct (mm)
035/050	200
080/100	250

Model	A	B	C	E	F	G	H	I	J	K	M	N	P	Q	R
	Length (mm)										Diameter (mm)		Length (mm)		
035/050	1,000.00	1,012.00	99.00	940.60	1,036.40	26.00	130.00	617.00	253.00	135.00	270.00	194.00	241.50	133.00	350.00
080/100	1,135.00	1,220.00	84.00	1,110.00	1,183.00	25.00	184.00	613.25	387.75	170.00	340.00	244.00	270.00		

Specifications

ERV Plus for DVM S

- Energy recovery ventilation unit with built-in direct expansion coil.
- Cellulose heat exchanger element.
- High Efficiency (F7 class) air filter.
- Two centrifugal fans direct driven by electric BLDC motor.
- Optional CO_2 sensor for automatic regulation.
- Bypass operation mode when there's a small temperature difference between indoor and outdoor environment (automatically or manually operated).
- Frost formation prevention without electric heater.
- Auto Restart function.

Model					AM050FNKDEH/EU	AM100FNKDEH/EU
Power Supply				Φ, #, V, Hz	1Φ, 2, 220~240 V, 50 Hz	1Φ, 2, 220~240 V, 50 Hz
Performance	Temp. Exchange Efficiency	Cooling	Turbo/High/Low	%	70/70/74	70/70/74
		Heating	Turbo/High/Low	%	75/75/79	75/75/79
	Effective Enthalpy Exchange Efficiency	Cooling	Turbo/High/Low	%	60/60/66	62/62/68
		Heating	Turbo/High/Low	%	73/73/79	75/75/81
	Outside Air Processing Capacity		Cooling (DX Coil/Element)	-	5.1 (3.6/1.5)	10.5 (7.1/3.4)
			Heating (DX Coil/Element)	-	6.5 (4.0/2.5)	13.2 (8.0/5.2)
Fan	Airflow Rate		Turbo/High/Low (UL)	m_3/hr	500/500/360	1,000/1,000/690
				l/s	138.9/138.9/100.0	277.8/277.8/191.7
	External Static Pressure		Turbo/High/Low	mmAq	16.30/10.20/8.70	15.30/9.20/7.60
				Pa	160.00/100.00/85.00	150.00/90.00/75.00
	Motor		Type	-	BLDC	BLDC
			Output	W	60	70
			Quantity	ea	2	2
Power	Power Input		Turbo/High/Low	W	220/140/90	510/350/235
	Current Input		Turbo/High/Low	A	1.7/1.0/0.6	3.7/2.4/1.6
Piping Connections	Liquid Pipe			ø, mm	6.35	6.35
				ø, inch	1/4	1/4
	Gas Pipe			ø, mm	12.70	12.70
				ø, inch	1/2	1/2
	Drain Pipe			ø, mm	VP25 (OD 32, ID 25)	VP25 (OD 32, ID 25)
				ø, inch	VP25 (OD 1-1/4", ID 1")	VP25 (OD 1-1/4", ID 1")
	Water Supply			ø, mm	12.70	12.70
				ø, inch	1/2	1/2
Field Wiring	Power Source Wire			mm²	1.5/2.5	1.5/2.5
	Transmission Cable			mm²	0.75~1.50	0.75~1.50
Refrigerant	Type			-	R410A(Fluorinated greenhouse gas, GWP=2,088)	
	Control Method			-	EEV	EEV
Sound	Sound Pressure[1]		Turbo/High/Low	dB(A)	36/32/28	36/33/31
	Sound Power			dB(A)	67	67
Dimensions	Net Weight			kg	61.0	90.0
	Net Dimensions (W x H x D)			mm	1,553 x 270 x 1,000	1,763 x 340 x 1,135
	Supply/Return/Exhaust/Outside Duct Flange (ø)			mm	200	250
Ambient Conditions	Around Unit			-	0~40 °C DB, 80 % RH or less	0~40 °C DB, 80 % RH or less
	Outdoor Air			-	-15~40 °C DB, 80 % RH or less	-15~40 °C DB, 80 % RH or less
	Return Air			-	0~40 °C DB, 80 % RH or less	0~40 °C DB, 80 % RH or less
Air Filter				-	Pre filter	Pre filter

Accessories		
Differential pressure switch[2]	Wired Remote Controller	CO_2 Sensor
MOS-P1050	MWR-WG00*N	MOS-C1

[1] Sound level was acquired in an anechoic room. Thus actual noise level may be different depending on the installation conditions.
[2] Please order MOS-P1050 separately. Differential pressure switch (model code: MOS-Pa) is a mandatory accessory for all ERV and ERV Plus units in EU countries according to Ecodesign Directive 1253/2014.

Dimensional drawings

ERV Plus for DVM S

AM***FNKDEH/EU

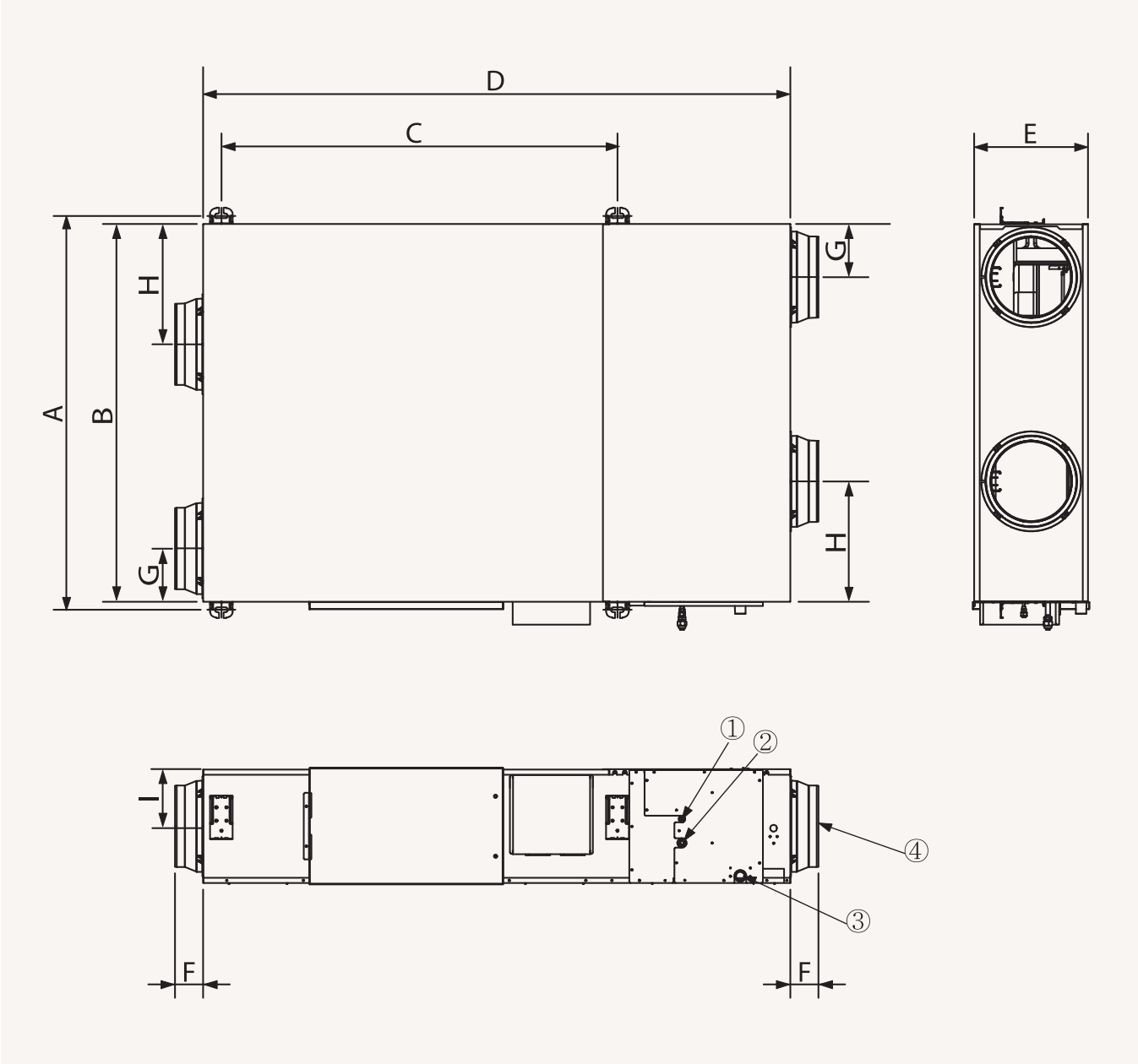

NO	Name	Description	
		AM050FNKDEH	AM100FNKDEH
1	Liquid pipe connection	ø6.35 Flare	
2	Gas pipe connection	ø12.70 Flare	
3	Drain pipe connection	VP25 (OD 32, ID 25)	
4	Nominal diameter for duct	Ø200	Ø250

Model	A	B	C	D	E	F	G	H	I
RHF050KHEA	1,036	1,000	987	1,553	270	99	130	253	135
RHF100KHEA	1,183	1,135	1,189	1,763	340	84	160	362	170

Specifications

OAP Duct for DVM S

- 100% outdoor air unit.
- Equipped with two Sirocco fans direct driven by a single motor.
- Discharge temperature control.
- No limitation in OAP Duct quantity for one system.
- Auto ESP function: the fan speed is adjustable according to ductwork external static pressure.
- Can be combined with other DVM indoor units to form one system.

Model				AM140MNEPEH/EU	AM220MNEPEH/EU	AM280MNEPEH/EU
Power Supply			Φ, #, V, Hz	1Φ, 2, 220~240 V, 50 Hz	1Φ, 2, 220~240 V, 50 Hz	1Φ, 2, 220~240 V, 50 Hz
Performance	Capacity (Nominal)	Cooling	kW	14.0	22.4	28.0
		Heating	kW	8.9	13.9	17.4
Power	Power Input (Nominal)	Cooling	W	300	450	600
		Heating	W	300	450	600
	Current Input (Nominal)	Cooling	A	2.2	3.5	4.6
		Heating	A	2.2	3.5	4.6
Heat Exchanger	Type		-	Fin & tube	Fin & tube	Fin & tube
	Material		Fin	Al	Al	Al
			Tube	Cu	Cu	Cu
Fan	Motor	Type	-	Sirocco Fan	Sirocco Fan	Sirocco Fan
		Output x n	W	183 x 1	630 x 1	630 x 1
		Number of Fans	ea	2	2	2
	Airflow Rate	H/M/L	m³/min	18	28	35
			l/s	300.0	466.7	583.3
	External Pressure	Min/Std/Max	mmAq	15.30/20.40/25.50	18.40/23.40/29.60	20.40/25.50/30.60
			Pa	150.00/200.00/250.00	180.00/230.00/290.00	200.00/250.00/300.00
Piping Connections	Liquid Pipe		ø, mm	9.52	9.52	9.52
			ø, inch	3/8	3/8	3/8
	Gas Pipe		ø, mm	15.88	19.05	22.22
			ø, inch	5/8	3/4	7/8
	Drain Pipe		ø, mm	VP25 (OD 32, ID 25)	VP25 (OD 32, ID 25)	VP25 (OD 32, ID 25)
Field Wiring	Transmission Cable	Min.	mm²	0.75	0.75	0.75
Refrigerant	Type		-	R410A(Fluorinated greenhouse gas, GWP=2,088)		
	Control Method		-	EEV (INCLUDED)	EEV (INCLUDED)	EEV (INCLUDED)
Noise Level	Sound Pressure[1]	H/M/L	dB(A)	42	46	47
	Sound Power	Cooling	dB(A)	65	66	69
Dimensions	Net Weight		kg	49.0	81.5	81.5
	Net Dimensions (W x H x D)		mm	1 210 x 370 x 656	1,360 x 460 x 910	1,360 x 460 x 910
Additional Accessories	Drain Pump	Drain Pump	-	MDP-M075SGU2D	MDP-G075SP	MDP-G075SP
		Max. Lifting Height/ Displacement	mm / litres/h	750/24	750/24	750/24
	Air Filter		-	Pre filter	Pre filter	Pre filter

Accessories				
Wireless Remote Controller	Touch Controller	Wired Remote Controller	Wi-Fi Kit	Wireless Receiver Kit
AR-EH03E (to be matched with MRK-A10N)	MWR-SH11N	MWR-WG00*N	MIM-H04EN	MRK-A10N (to be matched with AR-EH03E)

[1] Sound level was acquired in an anechoic room. Thus actual noise level may be different depending on the installation conditions.

Dimensional drawings

OAP Duct for DVM S

AM140MNEP*H

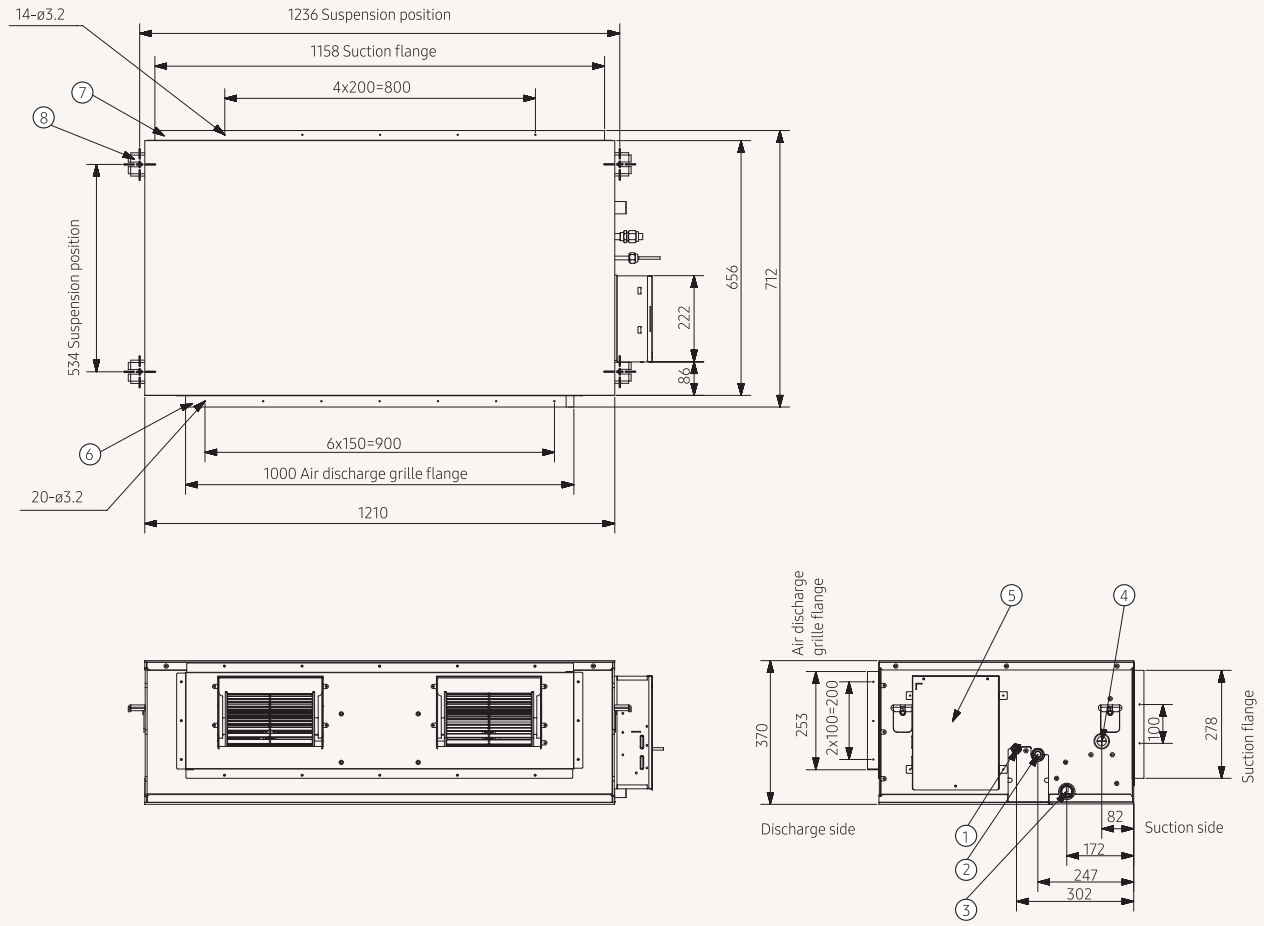

NO	Name	Description
1	Diameter of liquid pipe	ø9.52
2	Diameter of air pipe	ø15.88
3	Diameter of drain pipe	OD ø25, ID ø20
4	Diameter of drain pipe (Optional drain pump)	OD ø25, ID ø20
5	Power supply/Communication wiring conduit	
6	Air discharge grille flange	
7	Suction flange	
8	Hook	ø9.52 or M10

Dimensional drawings

OAP Duct for DVM S

AM140MNEP*H

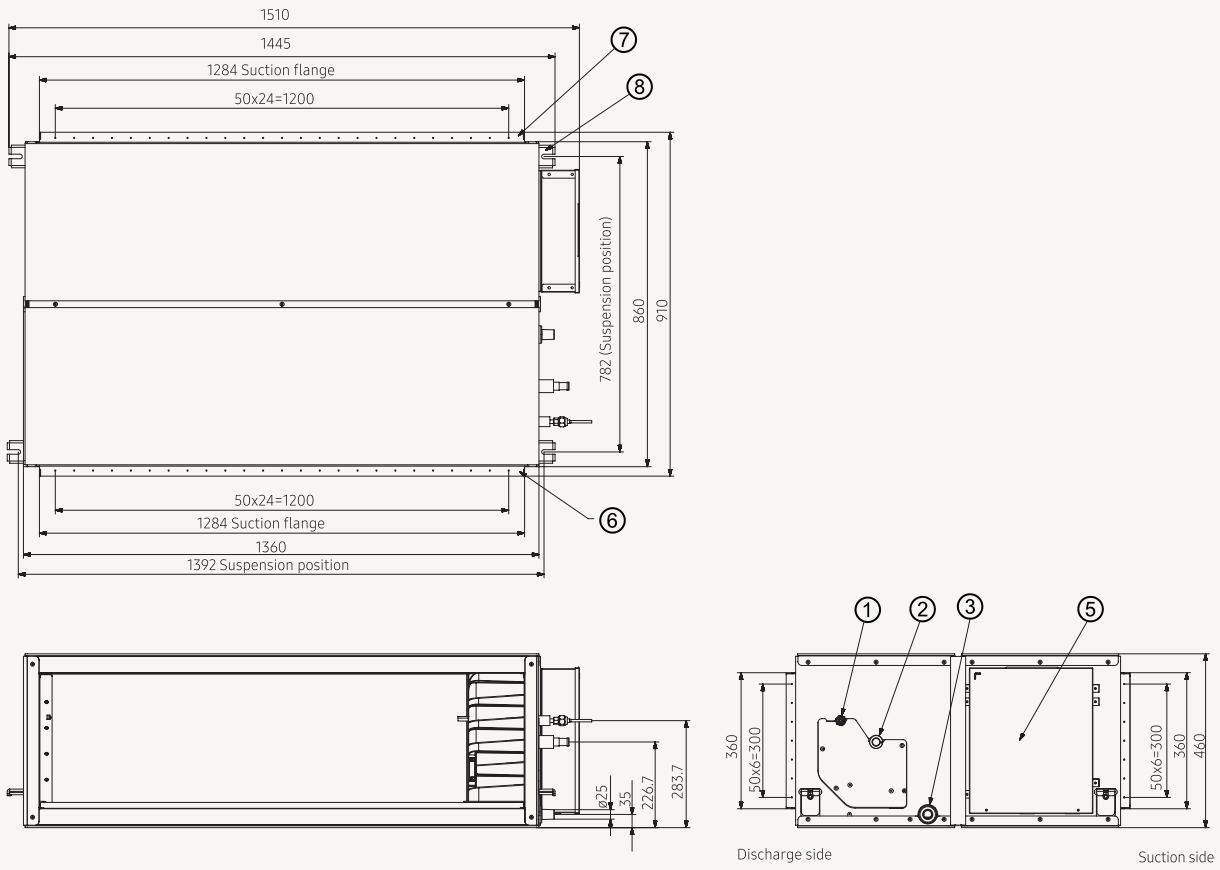

NO	Name	Description
1	Diameter of liquid pipe	ø9.52
2	Diameter of air pipe	ø15.88
3	Diameter of drain pipe	OD ø25, ID ø20
4	Diameter of drain pipe (Optional drain pump)	OD ø25, ID ø20
5	Power supply/Communication wiring conduit	
6	Air discharge grille flange	
7	Suction flange	
8	Hook	ø9.52 or M10

Controls

PREMIUM
BELLE
ISLE
COLD BREW
COFFEE
PREMIUM
MOONSHINE
TRIPLE DISTILLED
DISTILLED FROM CORN
CRAFT
SPIRITS

Line-up

	Product	Model	Image	Matchable Products
Individual Control System	Wireless Remote Controller	AR-EH03E		FJM, CAC, DVM, FCU *only for FCU 1-Way/4-Way Cassette
	Wireless Remote Controller	AR-KH03E		CAC, DVM, FCU *only for 360 Cassette
	Wired Remote Controller	MWR-WG00JN MWR-WG00KN		FJM, CAC, DVM, ERV, FCU
		MWR-WW00N MWR-WW10N MWR-WW10JN MWR-WW10KN		DVM *only for Hydro unit
	Simple Type Controller	MWR-SH00N		CAC, DVM, FCU
	Touch Type Controller	MWR-SH11N		CAC, DVM, FCU (with WindFree™ function)
	ERV Wired Remote Controller	MWR-VH12N		ERV
	Wireless Receiver Kit	MRK-A10N		CAC, DVM *only for duct models
Centralised Control System	ON/OFF Controller	MCM-A202DN	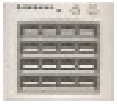	FJM, CAC, DVM, ERV Plus, HVM Chiller
	Touch Centralised Controller	MCM-A300N		FJM, CAC, DVM, ERV Plus, HVM Chiller
	Wi-Fi Kit	MIM-H04EN		All (except HVM Chiller & 3rd party FCU)
	Module Controller	MCM-A00N		HVM Chiller

	Product	Model	Image	Matchable Products
Gateway System	BACnet Gateway	MIM-B17BN		FJM, CAC, DVM, ERV Plus, HVM Chiller
	LonWorks Gateway	MIM-B18BN		FJM, CAC, DVM, ERV Plus, HVM Chiller
	External Contact Interface Module	MIM-B14 (KEY TAG) MIM-B14A (LEAK DETECTION)		RAC, FJM, CAC, DVM, HVM Chiller
	PIM (Pulse Interface Module)	MIM-B16N		FJM, CAC, DVM, ERV Plus, HVM Chiller
	MODBUS Gateway	MIM-B19N		FJM, CAC, DVM, ERV Plus, HVM Chiller
	Interface Module (Converter RS485 to NASA)	MIM-N01		FJM, CAC
	ERV Interface Module (Converter RS485 to NASA)	MIM-N10		ERV
	FCU Kit	MIM-F00N		Concealed & Cased FCU
	FCU Interface Module	MIM-F10N		FCU
Installation/ Test Run Solution	S-Converter	MIM-C02N		
Others	External Room Sensor	MRW-TA		FJM, CAC, DVM
	Operation Mode Selection Switch	MCM-C200		
	MTFC (Multi-Tenant Function Controller)	MCM-C210N		
Integrated Management System	DMS2.5	MIM-D01AN		FJM, CAC, DVM, ERV Plus, HVM Chiller
	S-NET3	MST-P3P		
	b.IoT Lite Software	MST-BL1A		

Controls

Compatibility guide

Classification	Product	Model	Image	Compatibility		
				DVM	HVM Chiller	FCU 1W/4W/360
Individual Control System	Wireless Remote Controller	AR-EH03E		●		●
	Wireless Remote Controller (360 Cassette only)	AR-KH03E		●		●
	Wired Remote Controller	MWR-WG00JN MWR-WG00KN		●		●
		MWR-WW00N MWR-WW10*N (DVM Hydro)		●		
	Simple Type Controller	MWR-SH00N		●		●
	Touch Controller	MWR-SH11N		●		●
	ERV Wired Remote Controller	MWR-VH12N				
	Wireless Receiver Kit	MRK-A10N		●		
Centralised Control System	Touch Centralised Controller	MCM-A300N		●	●	
	ON/OFF Controller	MCM-A202DN		●	●	
	Wi-Fi Kit	MIM-H04EN		●		●
	Module Controller	MCM-A00N			●	
Integrated Management System	DMS 2.5	MIM-D01AN		●	●	
	S-NET3	MST-P3P		●		
	b.IoT Lite Software	MST-BL1A		●		
Gateway System	BACnet Gateway	MIM-B17BN		●	●	
	Lonworks Gateway	MIM-B18BN		●	●	
	Modbus Interface Module	MIM-B19N		●		
	PIM (Pulse interface module)	MIM-B16N		●	●	
	External Contact Interface Module	MIM-B14		●	●	
		MIM-B14A (refrigerant leakage detector)		●		
	Interface Module Converter (RS485-NASA)	MIM-N01		●		
	ERV Interface Module Converter (RS485-NASA)	MIM-N10				
	FCU Interface Module	MIM-F00N MIM-F10N				●
Installation/ Test Run Solution	S-Converter	MIM-C02N		●	●	
Others	External Room Sensor	MRW-TA		●		
	Operation Mode Selection Switch	MIM-C200		●		
	MTFC (Multi-Tenant Function Controller)	MCM-210N		●		

Compatibility					
FCU 3rd party	ERV	ERV Kit	ERV Plus	PAC	AHU Kit
					•
•	•		•		•
•					
•					
	•		•		
	•	•	•	•	•
	•		•	•	•
	•	•	•	•	•
	•	•	•	•	•
	•		•	•	•
	•		•	•	•
	•	•	•	•	•
	•	•		•	•
	•		•	•	•
	•	•	•	•	•
	•		•	•	•
			•	•	•
	•	•			
•					
	•	•	•	•	•

Controls

Selection guide

Model		MWR-WG00*N	MWR-SH00N	MWR-SH11N	MWR-VH12N
Appearance	Dimensions	120.0 x 120.0 x 19.0	75x 122x 16.6	94.2 x 122.0 x 19.5	75.0 x 122.0 x 16.6
Connection	Indoor units control	●	●	●	
	ERV control	●			●
	Maximum connectable indoor units	16	16	16	6
Control & monitoring	ON/OFF	●	●	●	●
	Operation mode	●	●	●	●
	Fan speed	●	●	●	●
	Air swing	●	●	●	
	Room temperature display	●			
	°C convertible	●		●	
	Filter cleaning alarm reset	●	●	●	
	Air quality display	●			
	Purification display	●			
	Display indoor model number	●			
	Error display	●	●	●	●
	Error list	●			
Schedule	Weekly schedule	●			
	Simple ON/OFF timer		●	●	●
Convenient function	Dual set point	●			
	Multiple languages	●			
	Built-in room sensor	●		●	
	LCD backlight	●		●	
	Wireless RC restriction	●	●	●	
	Child lock	●	●	●	●
	Partial button lock	●	●	●	●
	Quiet mode	●	●	●	
	Sleep mode	●		●	
	Away mode (SAC)	●		●	
	Away mode (ERV)				●
	IR receiver	●		●	
	Real-time clock				
	Daylight saving time	●			
	Individual blade control	●			
	CO_2 display	○ ERV			●
	Purification mode	○ ERV			
Energy saving	Temperature range limit	●	●	●	
	Automatic operation stop	●			
	Operation time limit	●			
	Energy consumption monitoring	●			
	Energy saving mode with ERV	●			
Maintenance	SD slot	●			

Features and Dimensional drawings

Individual Control System		
Wireless Remote Controller **AR-EH03E** • Operation ON/OFF control • Fan speed control • Operation temperature setting • WindFree™ Cooling function • Filter cleaning alarm reset • Air swing control • Simple ON/OFF timer • Indoor unit option code setting • Option/Setting selection		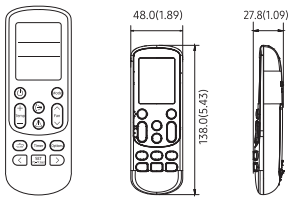
Wireless Remote Controller **AR-KH03E** • 360 Cassette airflow direction control • Operation ON/OFF control • Fan speed control • Operation temperature setting • Filter cleaning alarm reset • Simple ON/OFF timer • Indoor unit option code setting		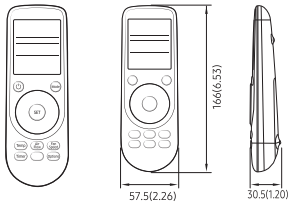
Wired Remote Controller **MWR-WG00JN, MWR-WG00KN** **Air conditioner/ERV control** • AC control: ON/OFF, operation mode, temperature setting, fan speed, airflow direction • ERV control: ON/OFF, operation mode, fan speed • AC/ERV error monitoring • Filter cleaning alert and reset alert time • Control a maximum of 16 "Indoor unit + ERV" in a group with a single wired controller **Energy saving operation** • Upper/lower temperature limit setting • Automatically stops operating when not used for certain period of time as set by user **Weekly operation schedule setting** • Weekly operating schedule (A/C only, ERV only, A/C+ERV) • Set desired AC operation mode, temperature and fan speed to operate based on a weekly schedule • Apply schedule exception day • Energy consumption monitoring • Operation time limit **User convenience function** • Child lock • Different button permission levels • Room temperature display • Dual set point • Built-in room temperature sensor • Real-time clock: displays current time and day (summer time support) • Multiple language support • Service mode support • Indoor unit cycle data monitoring • Indoor unit option code setting and monitoring • Indoor unit address setting and monitoring • SD card slot **Available languages:** • MWR-WG00JN: English, French, Spanish, Portuguese, Dutch, German • MWR-WG00KN: English, Italian, Greek, Czech, Slovak, Polish		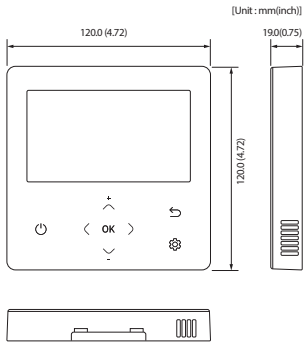
Simple Type Controller **MWR-SH00N** • Simplified wired remote controller • AC operation ON/OFF control • Fan speed control • Setting operation mode and temperature • Reset filter cleaning alert indicator • Adjust airflow direction • Operation ON/OFF timer function		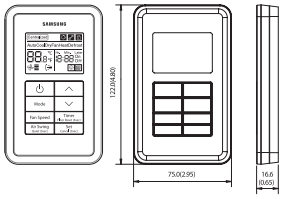

Controls

Touch Controller
MWR-SH11N

- Bigger display: clear & bright backlight screen with big fonts
- WindFree™ button: control WindFree™ function with just one click
- Room temperature monitor and room temperature display thanks to the built-in temperature sensor
- Icon/Function Lock: option of restricting icon/function on the display
- Sleep Mode: help users to sleep better by controlling temperature
- Outing Feature: keep room temperature above/below specific set value when the user is out of the room

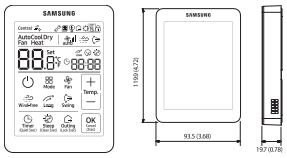

Wireless Receiver Kit
MRK-A10N

- Concealed wireless signal receiver
- Filter cleaning sign
- Fan operation display
- Operation Timer setting display
- Operation ON/OFF button
- Operation On display LED (blue)
- Defrost operation display LED (red)

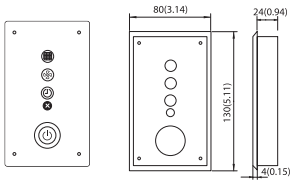

Centralised Control System

ON/OFF Controller
MCM-A202DN

- Maximum 16-group controller (Max. 128 units)
- Whole/Group/Individual indoor unit control (ON/OFF)
- Restriction on the use of wireless/wired remote controllers and external contact control
- Cooling and heating mode control
- Indoor unit error display

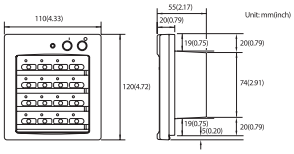

Touch Centralised Controller
MCM-A300N

- 7-inch touch LCD controller
- Controls a maximum of 128 indoor units
- Controls a maximum of 12 zones
- Schedule control, Indoor unit usage restriction, View indoor unit error history

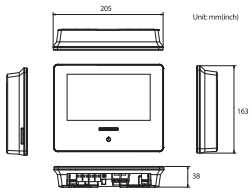

Wi-Fi Kit 2.0
MIM-H04EN

- Enhanced Convenience
- Voice Control available through a smartphone with Bixby
- Connected home with affordable units in every home using SmartThings
- Welcome cooling and heating based on Geo-fencing
- Individual indoor unit control
- Personalized Climate Environment
- Preferred automation
- Multi-device experience interoperable with smart appliances
- Energy Usage Monitoring
- Current and daily, weekly or monthly energy usage* of the outdoor unit
- Provides ease of installation
- Easy set-up possible for up to 16 indoor units at once
- Net dimensions (W x H x D): 185 x 130 x 29mm

Bixby
SmartThings

Module Controller
MCM-A00N

- DVM CHILLER ON/OFF control (Module/Group)
- Operation mode, water outlet temperature setting
- Optional operation setting
- Module/Group setting
- Weekly operation schedule setting

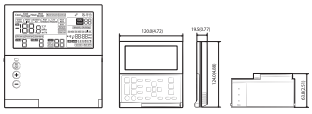

Controls

Gateway System

BACnet Gateway
MIM-B17BN

With the BMS control and monitoring function, BACnet gateway makes it easy to control the air conditioning network in various ways. BACnet gateway can control up to 256 indoor units.

- Interface for BACnet management system
- Maximum of 256 indoor units plus ERVs, supported by a maximum of 80 interface modules
- Includes DMS 2.5 functions

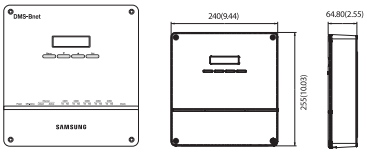

LonWorks Gateway
MIM-B18BN

LonWorks gateway is an interface for Lon-Connection to the LonWorks management system, providing you with a more convenient way to manage your air conditioning system. It can control a maximum of 128 indoor units.

- Exclusive use for DMS 2.5 power distribution
- Connection with up to eight watt-hour meters
- Pulse interface with watt-hour meters
- Watt-hour meter - by third party

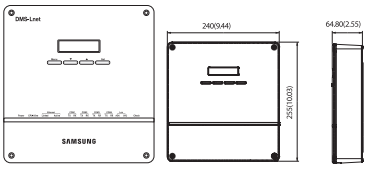

External Contact Interface Module
MIM-B14

Samsung Guestroom Management System saves users the energy and money wasted on cooling an unoccupied room. The air conditioner is activated when the Key-Tag is in place and turns off when the Key-Tag is removed. An external contact interface module provides direct indoor unit control via an external contact signal, as well as window-synchronised indoor unit control. The emergency control function features simple contact input. The module also generates indoor unit operation/error state output through relay contacts.

- Direct indoor unit control by external contact signal
- Window-synchronised indoor unit control
- Emergency control with simple contact input
- Indoor unit operation/error state output through relay contacts

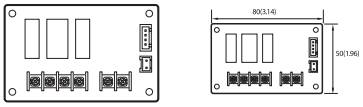

PIM (Pulse Interface Module)
MIM-B16N

- The Watt-Hour Meter Interface Module can be exclusively used for DMS 2.5 power distribution, displaying power consumption for each watt-hour meter.
- Exclusive use for DMS 2.5 power distribution
- Connection with up to eight watt-hour meters
- Pulse interface with watt-hour meters
- Watt-hour meter - by third party

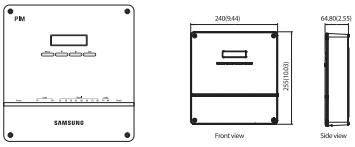

Controls

Interface Module **MIM-N01** • Communication interface module between outdoor units and the upper level controller which makes use of a different type of communication • Connect one interface module to one outdoor unit • Individual control - maximum of 48 indoor units • Group control - maximum of 16 groups • Automatic detection of communication type: determine the communication type used by the upper level controller according to the communication type used by the outdoor unit • Supported communication type - Conventional outdoor unit communication ←→ New upper level controller communication - New outdoor unit communication ←→ Conventional upper level controller communication		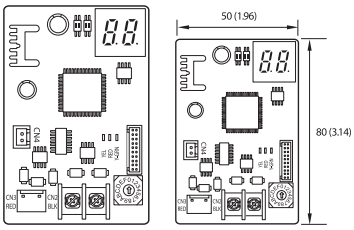
FCU Interface Module **MIM-F10N** • Communication interface module • Connect one FCU interface module to a maximum of 16 FCU Kits. • Supports FCU Kit only		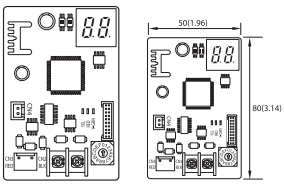
Interface Module (Converter RS485 to NASA) **MIM-N10** • Communication interface module between new communication ERV and controller • Connect one ERV interface module to a maximum of 16 ERVs • Individual control - maximum of 16 ERVs • Group control - maximum of 16 groups • Supported communication type - Conventional ERV communication ←→ New upper level controller communication - New ERV communication ←→ Conventional upper level controller communication - New ERV communication ←→ New upper level controller communication		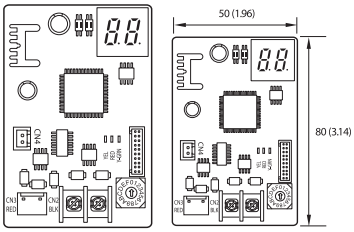
FCU Kit **MIM-F00N** • For 3rdParty FCU • Communication and control interfacing kit between 3rd party FCU and Samsung control system • Possible to use wired remote controller • Possible to use DMS 2.5, touch centralized controller • Provides external contact input • Outputs control signal for FCU fan/water valve • Size: 270 x 200 x 87.4mm (W x H x D)		

Installation/Test Run Solution

S-Converter
MIM-C02N

- Communication converting module to connect Samsung system air conditioner to a PC.
- Main purpose for use
  - To connect with test run programme [Test run programme]
  - S-NET Pro: Conventional communication
  - S-NET Pro2: NASA communication

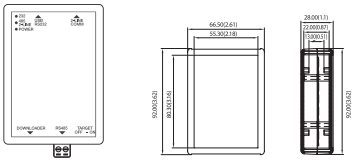

Others

External Room Sensor
MRW-TA

- Indoor unit is operated by MRW-TA instead of its own sensor.
- Wire length: 12 m

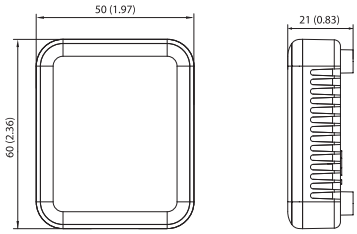

Operation Mode Selection Switch
MCM-C200

- Outdoor unit operation mode selection (Cooling, Heating or Auto)
- Mixed operation mode protection

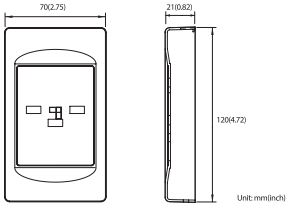

MTFC (Multi-Tenant Function Controller)
MCM-C210N

- Multi-tenant function controller is an auxiliary power supply device which allows the indoor unit to turn off (close EEV) normally and maintain communication when the mains power supply is cut.
- It is used on sites such as hotels, where individual power is supplied to the indoor unit

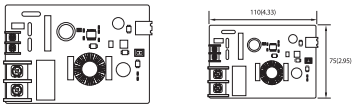

Controls

Accessories

Line-up

Classification	Image	Model DVM S (New Communication Protocol)	Application
Drain Pump		MDP-N047SNC1D	HSP Duct (22.4/28.0 kW) Fresh Air Intake Duct (14.0 kW)
		MDP-M075SGU2D	OAP Duct for DVM S
		MDP-G075SP	Global Duct (External Type)
		MDP-G075SQ	Global Duct (Internal Type)
AHU Kits		MXD-K025AN	EEV + Control Kit (7.00~8.75 kW AHU)
		MXD-K050AN	EEV + Control Kit (14.00~17.50 kW AHU)
		MXD-K075AN	EEV + Control Kit (21.00~26.25 kW AHU)
		MXD-K100AN	EEV + Control Kit (28.00~35.00 kW AHU)
		MXD-A64K100E	AHU EEV Kit (10 HP)
		MCM-D201N	Control Kit (PBA, 10 HP~40 HP)
360 Cassette Front Panel		PC4NUDMAN	NASA, Square
		PC4NBDMAN	NASA, Square - Black
		PC4NUNMAN	NASA, Circle (exposed installation)
		PC4NBNMAN	NASA, Circle (exposed installation) - Black
WindFree™ 4-Way Cassette Front Panel		PC4NUFMAN	WindFree™ 4-Way 900 x 900 Cassette
		PC4SUFMAN	WindFree™ 4-Way 600 x 600 Cassette
WindFree™ 1-Way Cassette Front Panel		PC1MWFMAN	WindFree™ 1-Way Cassette (1.7~2.2 kW)
		PC1NWFMAN	WindFree™ 1-Way Cassette (2.8~3.6 kW)
		PC1BWFMAN	WindFree™ 1-Way Cassette (5.6~7.1 kW)
WindFree™ 1-Way Cassette FCU Front Panel Medium		PC1NWFMBN	WindFree™ 1-Way Cassette FCU (2.8~3.6 kW)
		PC1BWFMBN	WindFree™ 1-Way Cassette FCU (5.6~7.1 kW)
Air Purification Panel * For only CAC, DVM		PC6EUCMAN	360 Cassette
		PC4NUCEAN	WindFree™ 4-Way 900 x 900 Cassette
		PC1MWCMAN	WindFree™ 1-Way Cassette (1.7~2.2 kW)
		PC1NWCMAN	WindFree™ 1-Way Cassette (2.8~3.6 kW)
		PC1BWCMAN	WindFree™ 1-Way Cassette (5.6~7.1 kW)
Auto Elevation Panel * For only CAC, DVM		PC6EUXMAN	360 Cassette
		PC4NUXMAN	WindFree™ 4-Way 900 x 900 Cassette

Classification	Image	Model DVM S (New Communication Protocol)	Application
Motion Detect Sensor		MCR-SMC	WindFree™ 4-Way 600 x 600 Cassette
		MCR-SMD	WindFree™ 4-Way Cassette
		MCR-SME	360 Cassette with square panel
Y-joint		MXJ-YA1509M	15.0 kW and below
		MXJ-YA2512M	Over 15.0 kW~40.0 kW and below
		MXJ-YA2812M	Over 40.0 kW~45.0 kW and below
		MXJ-YA2815M	Over 45.0 kW~70.3 kW and below
		MXJ-YA3419M	Over 70.3 kW~98.4 kW and below
		MXJ-YA4119M	Over 98.4 kW~135.2 kW and below
		MXJ-YA4422M	Over 135.2 kW
Y-Joint (HR Only)		MXJ-YA1500M	22.4 kW and below
		MXJ-YA2500M	Over 22.4 kW~70.3 kW and below
		MXJ-YA3100M	Over 70.3 kW~135.2 kW and below
		MXJ-YA3800M	Over 135.2 kW
Y-Joint (Outdoor Unit)		MXJ-TA3419M	135.2 kW and below
		MXJ-TA4122M	140.2 kW and over
Y-Joint (HR Outdoor Unit)		MXJ-TA3100M	135.2 kW and below
		MXJ-TA3800M	140.2 kW and over
Y-Joint (for MCU)		MXJ-YM1509M	Over 16.0 kW~28.0 kW and below
		MXJ-YM1206M	Over 6.0 kW~14.0 kW and below
		MXJ-YM1206R	Over 6.0 kW~14.0 kW and below
Distribution Header		MXJ-HA2512M	45.0 kW and below (for 4 rooms)
		MXJ-HA3115M	70.3 kW and below (for 8 rooms)
		MXJ-HA3819M	Over 70.3 kW~135.2 kW and below (for 8 rooms)
Heat Recovery Changer		MCU-R4NEK0N	
		MCU-S6NEK3N	
MCU	Picture N/A	MCU-S12NEK1N	12 ports, max 61.6 kW (~16 kW/port)
	Picture N/A	MCU-S8NEK1N	8 ports, max 61.6 kW (~16 kW/port)
		MCU-S6NEK2N	6 ports, max 61.6 kW (~16 kW/port)
		MCU-S4NEK3N	4 ports, max 61.6 kW (~16 kW/port)
		MCU-S2NEK2N	2 ports, max 32.0 kW (~16 kW/port)
		MCU-S1NEK1N	1 ports, max 16.0 kW (~16 kW/port)

Classification	Image	Model DVM S (New Communication Protocol)	Application
EEV Kit		MXD-E24K132A	2 Indoor
		MXD-E24K200A	
		MXD-E32K200A	
		MXD-E24K232A	3 Indoor
		MXD-E24K300A	
		MXD-E32K224A	
		MXD-E32K300A	
		MEV-E24SA	1 Indoor
		MEV-E32SA	
DRAIN HOSE		MOK-200DA	L TYPE SLIM 1-WAY / 4-WAY MINI
Differential Pressure Switch		MOS-P1050	ERV (Plus)
CO_2 SENSOR		MOS-C1	ERV (Plus)
3rd party FCU Accessories		ACL-A60V3	3-Way Valve Kit
		ACL-ADP	Drain pipe
		ACL-A0**HC	Heating coil 4-pipe
		ACL-A0**V3	3-Way Valve Kit 4-pipe
		ACL-ADV	Auxiliary Drain Pan Vertical
		ACL-ADH	Auxiliary Drain Pan Horizontal

Design and support

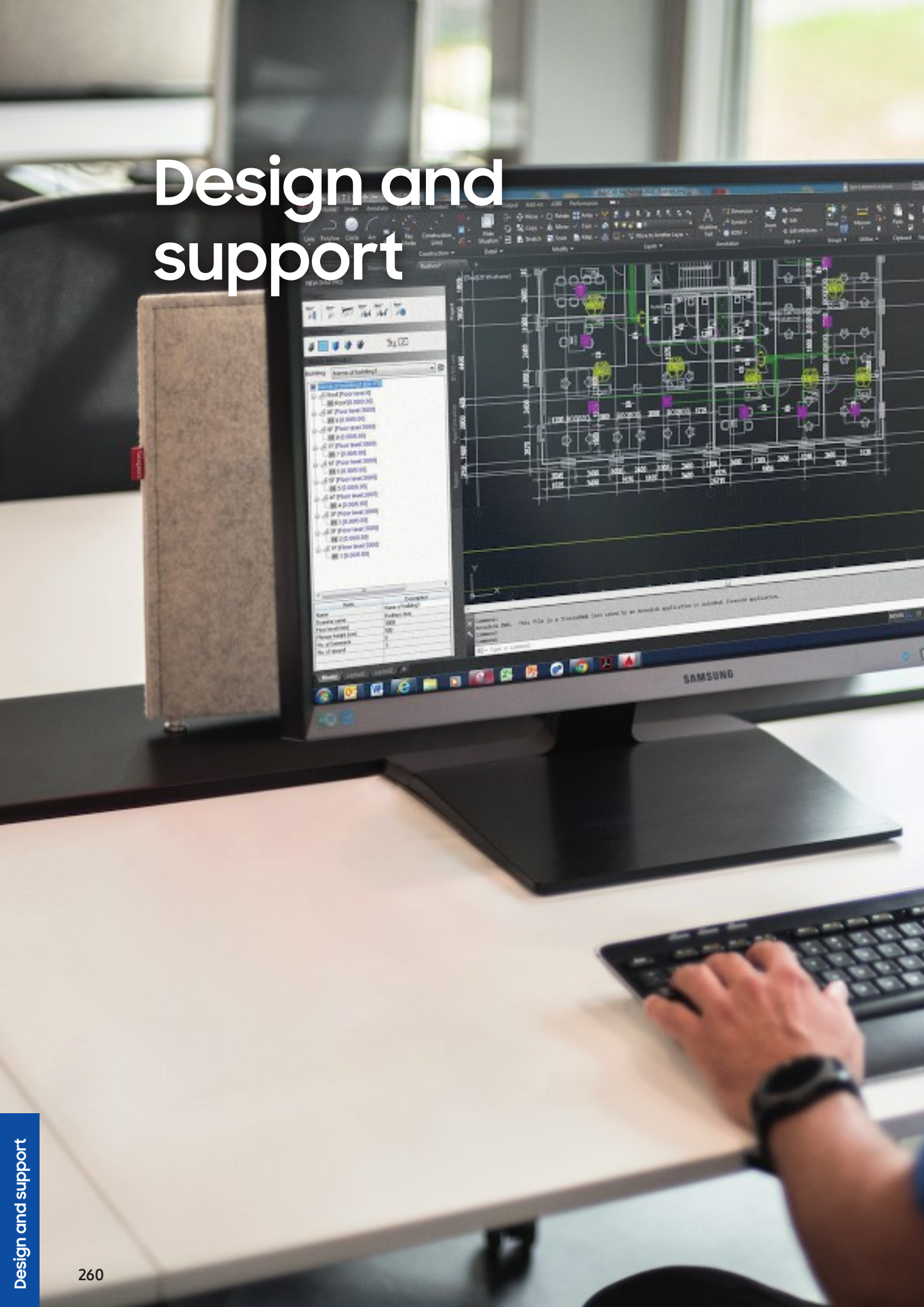

SAMSUN

Samsung Climate Solutions Partner Portal

As one of Samsung's registered Climate Solutions partners, you will have access to our Partner Portal and its many benefits. Whether you are looking for technical product documentation, requesting technical support or registering for training, the Samsung Climate Solutions Partner Portal offers you everything you need to consistently deliver the best results.

Access technical resources

The Technical Resources section provides you with all of the relevant information you need to understand the product's functionality and to prepare and design projects. A library full of technical information is at your fingertips, ranging from technical data books, BIM files and certificates to exploded views, drawings and different kinds of manuals.

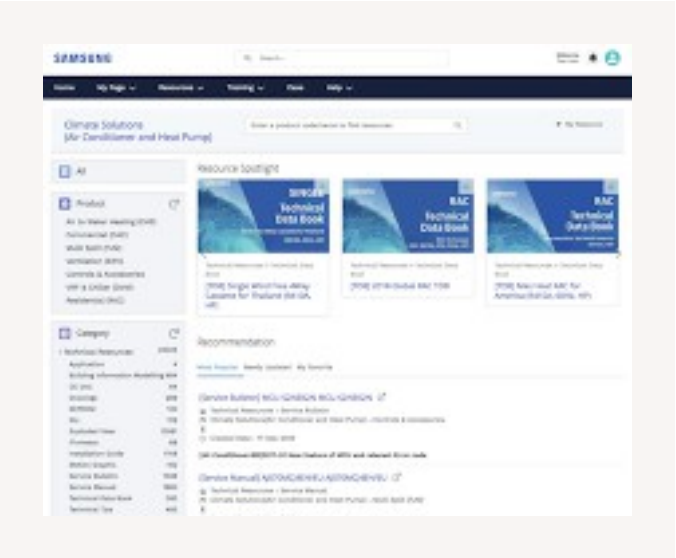

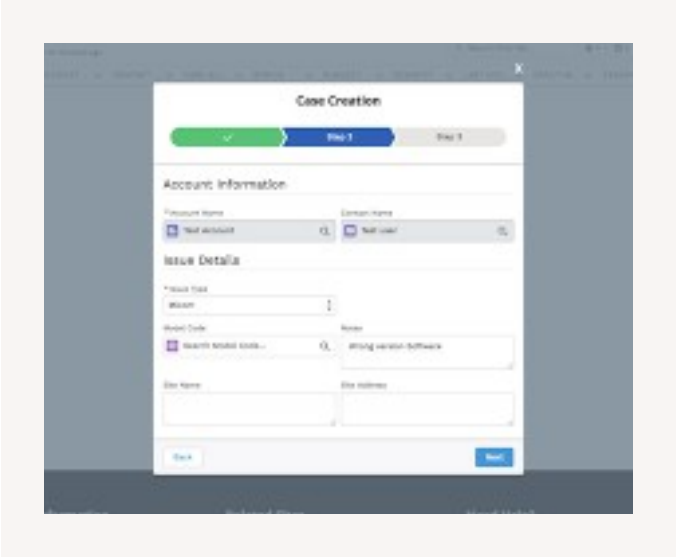

Request technical support

You can easily request technical support through the Samsung Partner Portal by reporting your case using our built-in ticketing system. You can rest assured that our well-trained technical experts will work to solve your issue as soon as possible.

Register for training

If you are dedicated to becoming a Samsung climate solutions expert, you can access Samsung's educational portal for training sessions provided by experienced trainers. The portal allows you to search for online courses and materials, test your climate solutions knowledge, and more. The Samsung Business Academy is here to help you succeed.[1]

1 The registration process for and availability of training courses may vary per country. Please contact your direct Samsung contact person for more information.

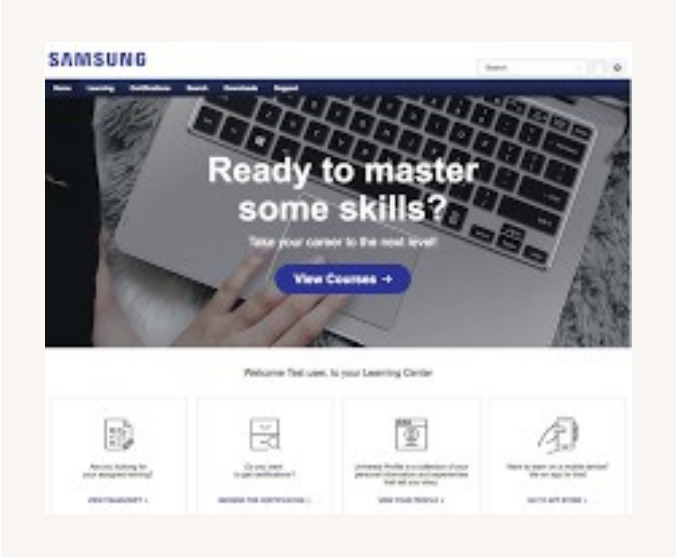

How to access

Register

To register for the Samsung Climate Solutions Partner Portal, open your web browser[1] and go to **partnerhub.samsung.com/climate** to complete the registration form.

Access

Your information will be verified and your account will be activated. You will receive your personal login details.

Manage account

Keep your account details up to date and invite your colleagues to join.

Search and download

Access a full library of resources, request technical support, or sign up for a Climate Solutions Academy training session.

1 Google Chrome is the recommended web browser for using the Samsung Climate Solutions Partner Portal.

Samsung DVM Pro 2.0

Samsung introduces new updated version of DVM Pro version 2.0. Product selection is extended and now the tool is also available for EHS and HVM lineup.

Samsung DVM Pro 2.0 is an advanced design automation programme which helps you to select the most suitable equipment for easily and precisely designing your air conditioning system. It helps to ensure that the system's design falls within Samsung's engineering guidelines. With its reports, pipe and wire diagrams, additional refrigerant values and other information, Samsung DVM Pro 2.0 is a powerful tool for engineers, designers or installers.

Sales Mode

Sales Mode enables users to define their requirements and select air conditioning products quickly and easily.

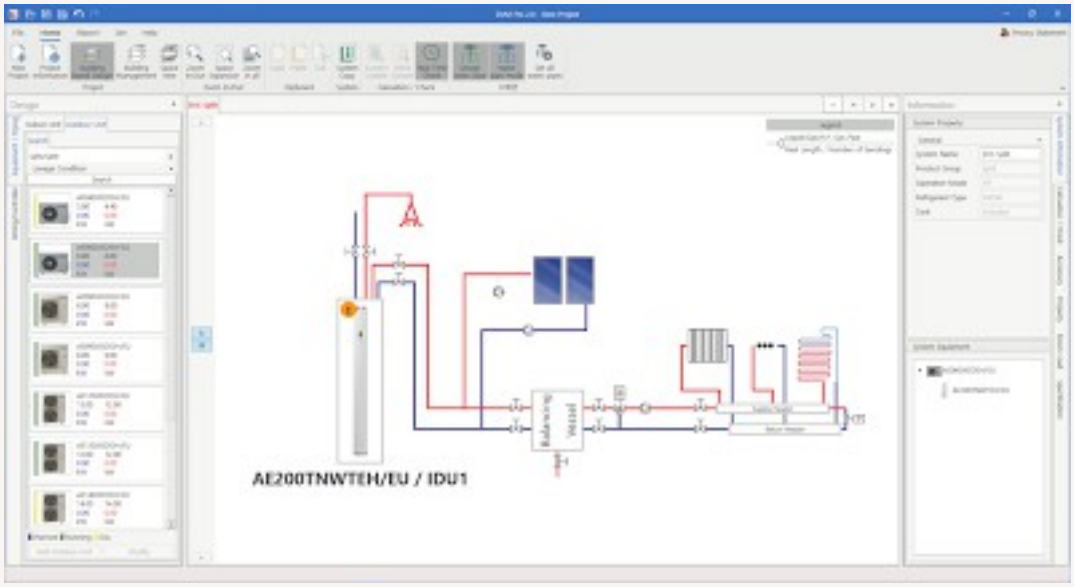

Product selection
List of equipment, including indoor units, outdoor units, controls and accessories

Reports
Specifications, diagrams in DWG & BMP format, quotations

Updated Toolbar NEW
User-friendly tool bar helps to guide intuitively

Piping schematics
Basic or manual selection with system check and capacity simulation

Performance simulation
Capacity correction tool against specific design conditions

Wiring schematics
Automatic diagrams including communication wiring for indoor/outdoor/control units and electric power meters

Control systems
Automatic control unit selection

CAD Mode

CAD Mode is an in-depth and precise design tool that enables users to design their air conditioning systems without using AutoCAD software.

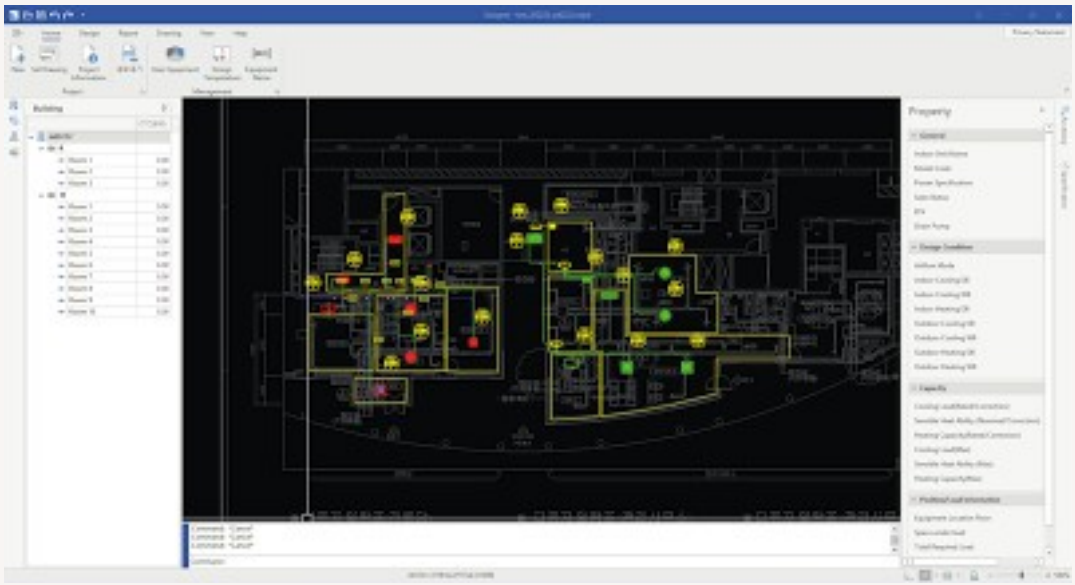

Pipe sizing & lengths
Refrigerant & drain pipe sizing

System check
Installation regulation & refrigerant charging

Automatic selection
Refnet joint, header & distributor kit

Automatic report
Piping installation

Design without AutoCAD
New DVM Pro 2 CAD mode is able to load AutoCAD drawings (.dwg) without AutoCAD installed on user PC.

How to access

1 www

Register

Go to **dvmpro.mkt.samsung.com** to access the Samsung DVM Pro 2.0 Portal[1]. If you do not have access yet, complete the registration process and you will be sent the access details.

2

Select

Click on DVM Pro 2.0 via the main menu and scroll to the end of the page to select the option DVM Pro 2.0 download.

3

Download

Download the DVM Pro 2.0 installation file, view the user manuals, and start designing your project.

[1] Google Chrome is the recommended web browser for using the Samsung DVM Pro 2.0 Portal.

Samsung HVM Selection Tool

To support engineers in designing a Samsung HVM water-based VRF system, Samsung has created an easy-to-use selection tool with convenience in mind. This tool will help you design your whole system in a modular way, simplifying and speeding up the process. The Samsung HVM Selection Tool does not require any software installation and is freely accessible online, giving you a head start in creating and designing your projects for tomorrow.

Easy system configuration

The drag and drop interface of the HVM Selection Tool enables you to configure the HVM system easily and quickly. Based on the configuration selected, the tool generates information such as total water flow and total system pressure drop, enabling you to select the appropriate water pump and piping. Values for cooling and heating are calculated automatically based on the design conditions selected for the project (room temperature, outside temperature, water temperature).

Complete technical information

The HVM Selection Tool includes a detailed list of available outdoor Samsung HVM chiller units and indoor FCU units. It also includes an overview of accessories and essential hydronic components, and features the required efficiency data (SCOP, COP, SEER and EER). To enable the preadjustment of balancing valves, the detailed list of indoor units shows the water flow, pressure drop and pressure difference data for the water line holding the highest pressure drop.

Automated project report

You can opt for a comprehensive annual energy consumption simulation, based on a fixed set of parameters and the climate zone selected for the heating mode (warm, average, cold).
High resolution PDF documents can be generated showing the wiring diagrams and hydraulic diagrams for indoor units and outdoor units, including the pipe dimensions.
The detailed project report is presented in a layout that is easy to understand.

Tender specifications file

A tender specifications file can be generated that includes full product descriptions, feature explanations and complete technical data. You can also personalise the document by including additional information about the customer and the designer.

How to access

Access

To access the HVM Selection Tool, open your web browser[1] and go to **hvm.openforce.com**. No additional software installation is required.

Design

Create your project, design the HVM system and generate an automated report and tender specifications file online.

Support

If you require support, please consult the manual that can be downloaded directly from the HVM selection tool.

[1] Google Chrome is the recommended web browser for using the Samsung Climate Solutions Partner Portal.

Samsung specialist design support

Bringing together technical expertise and practical experience in climate system design, Samsung provides a single point of contact for the design and management of cooling and heating installations in buildings. With assistance ranging from 3D visualisations with BIM support to CFD analysis to optimise indoor thermal conditions and BREEAM advice to achieve the best environmental performance, Samsung's specialist engineers are ready to support you in making your project a success.

BIM support

Building Information Modelling (BIM) is an intelligent 3D model-based process for creating and managing information on the physical and functional characteristics of a building, across the project lifecycle and covering all parties involved, including the supply chain. BIM gives architects, engineers and construction professionals the insights and tools necessary to efficiently plan, design, construct and manage buildings and infrastructure.

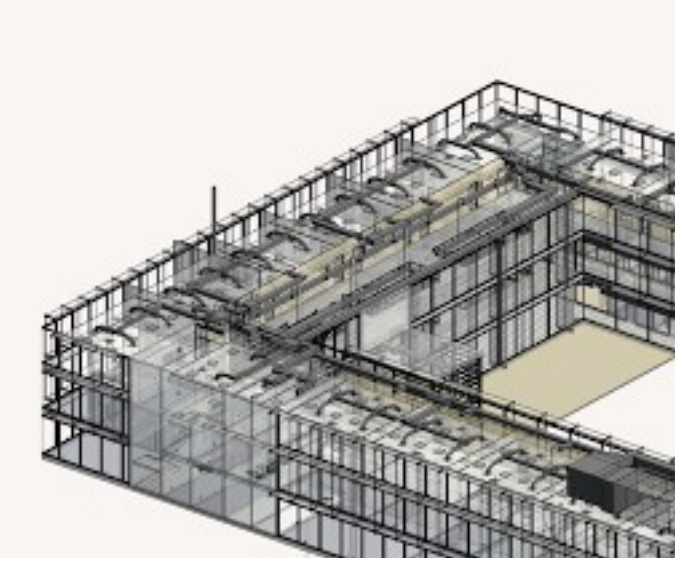

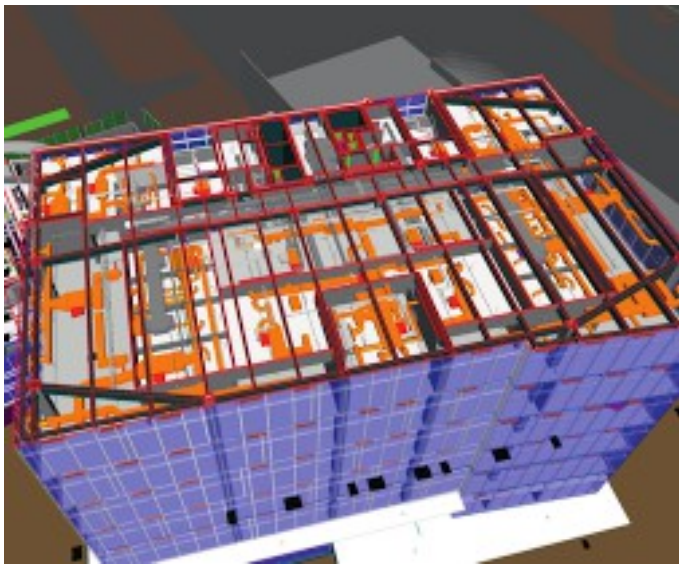

To support you as one of our Climate Solutions partners, Samsung has developed a full range of BIM models for all VRF and VRF Chiller products. You can download these 3D models directly from Samsung Partner Portal or from an online BIM object library by accessing bimobject.com. Alternatively, you can call on our qualified Samsung engineering team for dedicated project design support, using Revit® software to create 3D plans of the building including Samsung air conditioner installations.

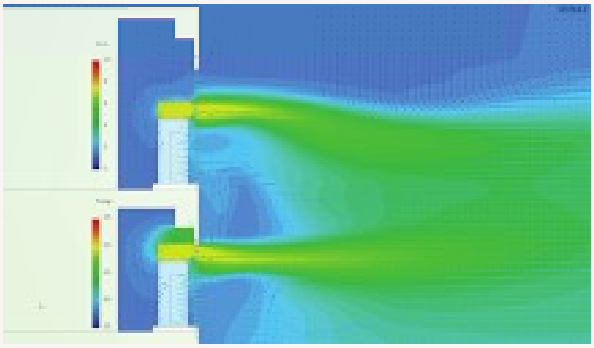

CFD analysis

Computational Fluid Dynamics (CFD) uses numerical analysis and data structures to analyse thermal conditions in buildings. It allows the virtual testing and optimisation of various climate system configurations in the context of occupant comfort, energy efficiency and running cost. Samsung can offer you specialist CFD support that includes analyses such as indoor temperature profiling, airflow distribution and sound simulation.

BREEAM advice

BREEAM (BRE[1] Environmental Assessment Method) is one of the most widely used environmental assessment methods and rating systems for buildings. It sets the standard for best practice in sustainable design and has become the de facto measure used to describe a building's environmental performance. Samsung's Accredited Professionals (APs) can support you in assessing the optimal installation for achieving a high certification score to match your green building programme.

[1] BRE (Building Research Establishment) is a leading, multidisciplinary building science centre based in the United Kingdom.

How to obtain support

1 www

BIM support

To download Samsung BIM models, go to Technical Resources on **partnerhub.samsung.com/climate**[1]. To request dedicated project design support from Samsung, please contact your Samsung representative.

2

CFD analysis

To obtain CFD analysis support from Samsung, please contact your Samsung representative. Certain conditions may apply, subject to the project.

3

BREEAM advice

Please contact your Samsung representative to request a BREEAM evaluation by one of Samsung's Accredited Professionals (APs).

[1] Google Chrome is the recommended web browser for using the Samsung Climate Solutions Partner Portal.

Samsung Climate Solutions Academy

Samsung Climate Solutions Academy is committed to providing engineers with the technical skills required to install a Samsung product efficiently, and to help relay necessary information to users. All courses are designed to provide attendees with the opportunity to develop both theoretical and practical knowledge of Samsung's vast range of equipment and solutions.

Available training modules

Essential courses: Basic commercial training

- The product line-up, accessories and available controls
- The unique features of Samsung products
- Installation considerations

Advanced courses: Technical training

- How to correctly install and configure a system
- Commissioning: common issues during commissioning and how to resolve any challenges
- Troubleshooting and fault-finding (by use of E-codes)
- Control logic
- Case studies

Advanced courses: Design training

- Understanding customers' needs and offering possible solutions
- DVM Pro 2.0 - Samsung's advanced design tool
- Case studies

Note: the registration process for and availability of training courses may vary per country. Please contact your Samsung representative for more information.

Samsung training centres in Europe

How to register for training

Search

To check for available training courses, go to Samsung Business Academy (SBA) via the Samsung Climate Solutions Partner Portal[1]: **partnerhub.samsung.com/climate**. Search the online event calendar and select the training course you would like to attend.

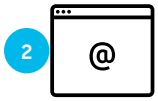

Register

After identifying the training course you would like to attend, follow the registration process. Once you have registered successfully you will receive a confirmation e-mail.

Get certified

Following confirmation of your registration, we will invite you to one of our training centres. You will be trained by one of our specialised Master Trainers or Product Specialists, and receive a Certificate of Completion.

[1] Google Chrome is the recommended web browser for using the Samsung Climate Solutions Partner Portal.

Notes

Notes

Notes

Notes

SAMSUNG

Find your flow.

Create your perfect environment.

Learn more about Samsung Climate Solutions at:
www.samsung.com/climate

Copyright © 2022 Samsung Electronics Air Conditioner Europe B.V. All rights reserved. Samsung is a registered trademark of Samsung Electronics Co., Ltd. Specifications and designs are subject to change without notice and may include preliminary information. Non-metric weights and measurements are approximate. All data was deemed correct at the time of creation. Samsung is not liable for errors or omissions. Some images may be digitally altered. All brand, product, service names and logos are trademarks and/or registered trademarks of their respective owners and are hereby recognised and acknowledged.

EUROVENT CERTIFIED PERFORMANCE
www.eurovent-certification.com

Samsung Electronics Co., Ltd. participates in the Eurovent Certification Programme (ECP) for Air Conditioners (AC), Variable Refrigerant Flow (VRF) and Liquid Chilling Packages Heat Pump (LCP-HP). To check the ongoing validity of certification, please visit: www.eurovent-certification.com

Samsung Electronics Air Conditioner Europe B.V.
Evert van de Beekstraat 310, 1118 CX Schiphol
P.O. Box 75810, 1118 ZZ Schiphol
+31 (0)8 81 41 61 00
The Netherlands